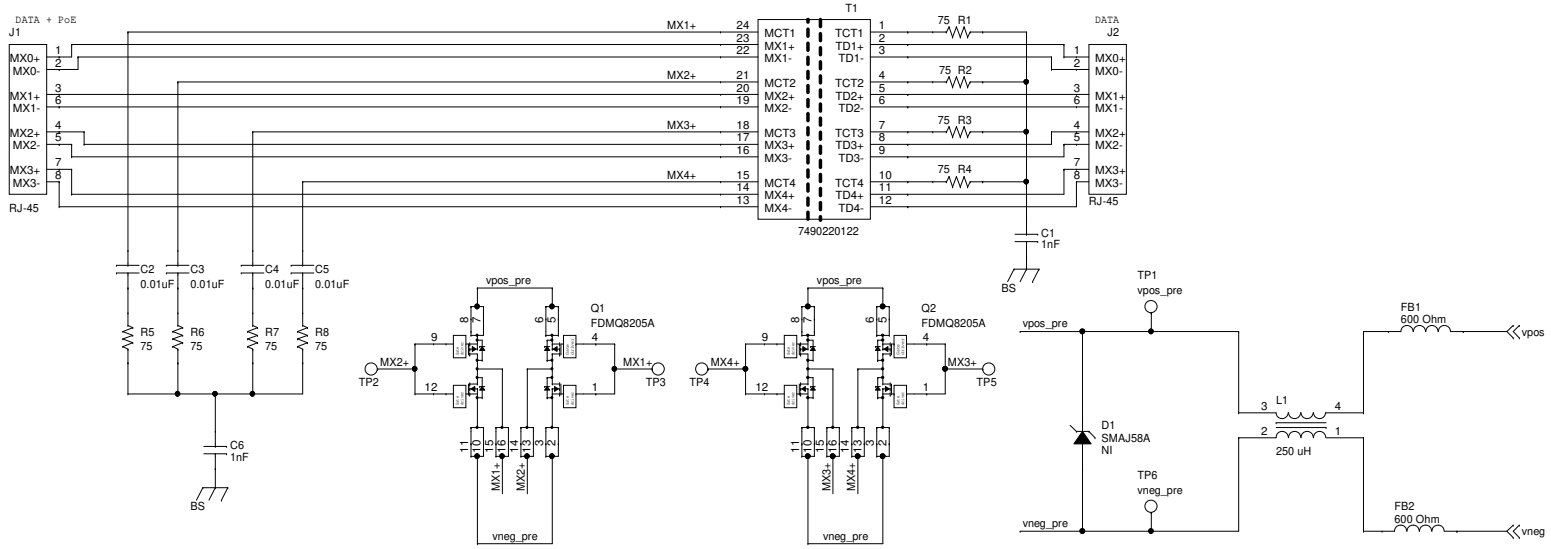

PCB1

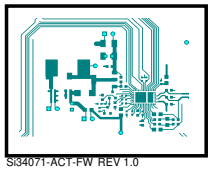

Si34071-ACT-FW REV 1.0

LB1

PoE_EVB_LABEL

LABEL-SI34071-FW-12V-C8 R1.0

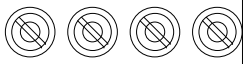

SO1 SO2 SO3 SO4

SKYWORKS

200 W Cesar Chavez
Austin, TX 78701

Title	Si34071-FW-12V-C8-Interface		
Size B	Document Number SI34071-FW-12V-C8	<Core Design>	Rev 1.0
Date: Thursday, December 16, 2021	Sheet 1 of 3		

Classification BOM

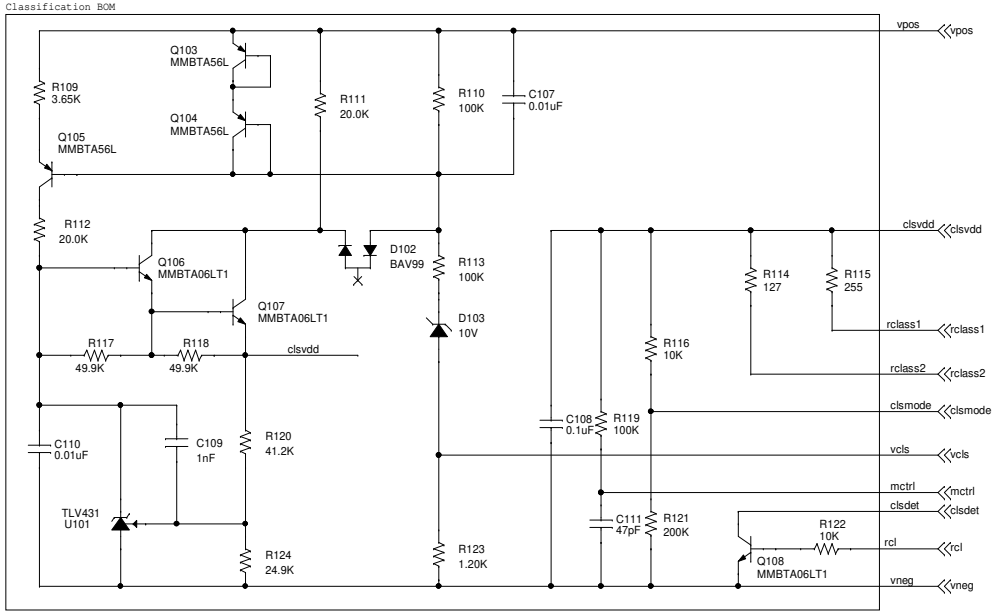

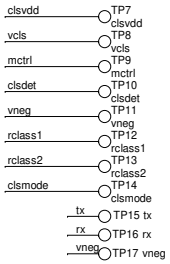

communication with MCU

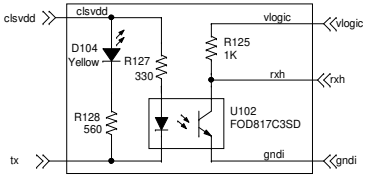

LDO and communication header for host MCU

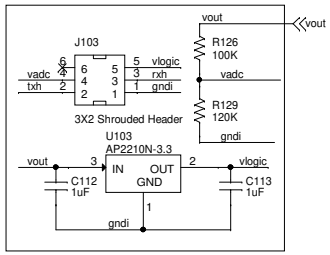

communication with MCU

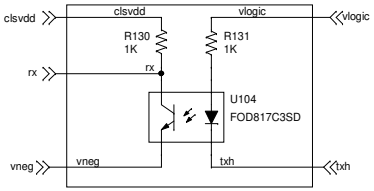

SKYWORKS
200 W Cesar Chavez
Austin, TX 78701

Title	Si34071-FW-12V-C8-Classification-BOM + MCU tx/rx		
Size B	Document Number SI34071-FW-12V-C8	<Core Design>	Rev 1.0
Date: Thursday, December 16, 2021	Sheet 2 of 3		

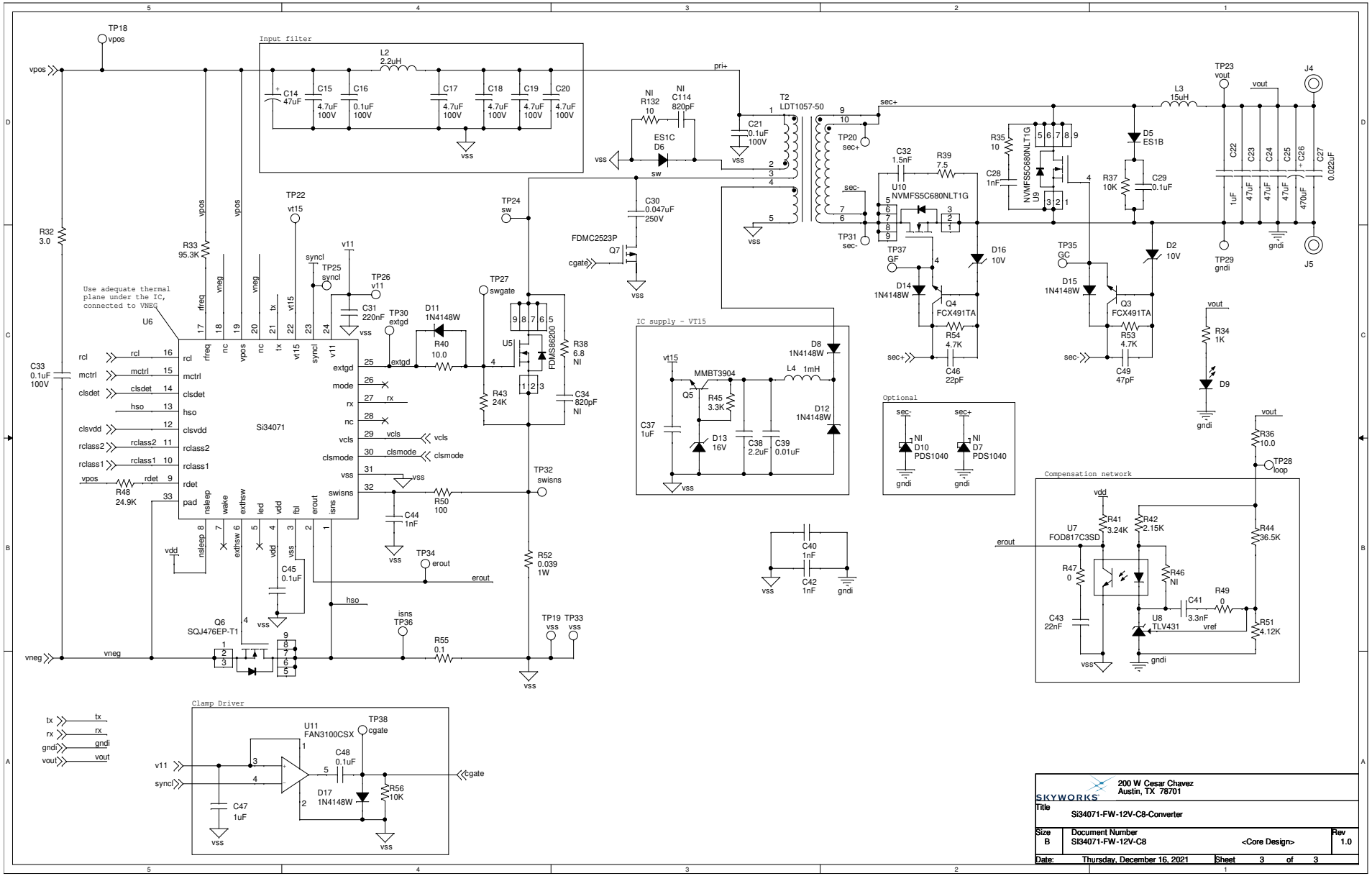

SKYWORKS

200 W Cesar Chavez
Austin, TX 78701

Title: Si34071-FW-12V-C8-Converter

Size	Document Number		Rev
B	SI34071-FW-12V-C8	<Core Design>	1.0

Date: Thursday, December 16, 2021 Sheet 3 of 3