DATA SHEET

SKY68020-11: LTE Universal Multi-Band Front-End Module for IoT Applications

Applications

- Low-power, low-data-rate cellular IoT
- Half-duplex operation (HD-FDD) LTE:
  - LTE-M
  - NB-IoT
- LTE universal modem products:
  - Low-band: 5, 8, 12, 13, 14, 17, 18, 19, 20, 26, 28, 71, 85
- Mid-band: 1, 2, 3, 4, 25, 39, 66, 70

Features

- Output power: +24 dBm, optimized to support LTE for 1 RB to 6 RB
- Compatible with 3GPP Rel 13 and Rel 14
- Exceptional harmonics performance:
  - Band 13 second harmonic: –60 dBm/MHz
  - Band 28 second harmonic: –55 dBm/MHz
  - Band 28 third harmonic: –52 dBm/MHz
- Broadband PA supporting APT mode of operation or V_{CC} fixed supply: 2.85 V to 4.5 V
- Integrated TX low-pass filters for optimized harmonic rejection
- Integrated SP6T antenna TX/RX switch
- Integrated RX low-pass filters for out-of-band rejection
- Two broadband, high-power AUX ports for additional band support
- Low leakage current: 0.4 µA
- Adaptive biasing scheme for maximum PA efficiencies
- MIPI® RFFE control interface, 2.0 compliant
- Pin-to-pin compatible with the SKY68000-31, SKY68001-31, and SKY68001-41
- Operating temperature range: –40°C to +85°C
- Small low-profile package (4 mm x 5 mm x 0.83 typ. mm), MSL3 @ 260 °C per JEDEC J-STD-020
- For RoHS and other product compliance information, see the Skyworks Certificate of Conformance.

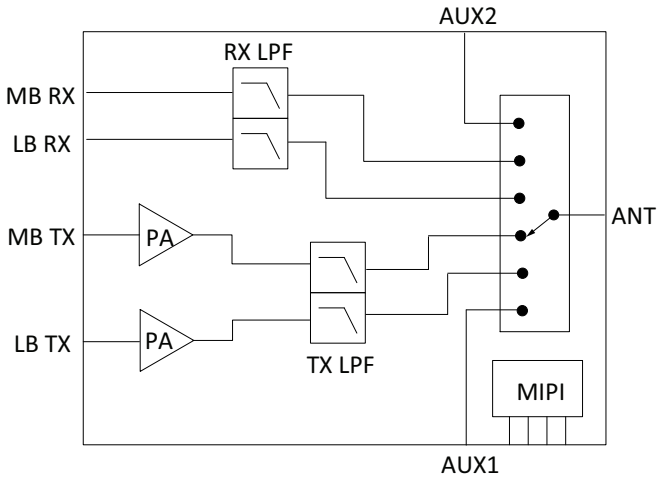

Figure 1. Functional Block Diagram

Description

The SKY68020-11 is a hybrid, multiband, multichip RF front-end (RFFE) module supporting cellular LTE-M/NB-IoT (half duplex system) transceiver platforms. The module integrates the entire RF front-end necessary for an LTE multi-band radio operating in the low-band and mid-band frequencies, including RX low-pass filters, broadband PA with bias controller, TX low-pass harmonic filter, antenna switch, and MIPI RFFE controller.

Transmit Section

The PA load-line is optimized for high efficiency while simultaneously meeting 3GPP ACLR and emissions mask specifications with LTE up to 6 RB.

An integrated LPF is implemented to reject the PA and transceiver harmonics while at the same time minimizing any post PA loss for an optimized transmit current consumption.

Out-of-band emissions performance is emphasized by the design to be 3GPP-compliant for low-band and mid-band frequencies.

Receive Section

Receive low-pass filters are integrated into the module along with the necessary matching to yield a 50 Ω single-ended impedance for the antenna and RX ports. The filters provide a high level of rejection to out-of-band interference, protecting the transceiver from high blocking signal levels and to support 3GPP LTE blocking test conformance. The low-pass filters are cascaded with the low throw count switch to establish a lower insertion loss and noise figure than conventional LTE receivers.

Auxiliary Paths

The two AUX ports are additional broadband ports that can be used symmetrically for either TX or RX operation. The AUX ports can support conventional GSM power levels.

Smart Biasing

For most IoT applications, the dc-dc converter might not be available to control the PA V_{CC} supply. With a fixed dc supply, smart biasing allows for easy power control through the MIPI interface by programming reduced bias current for lower gain states. Based on the application, a set of four to six different bias conditions with specific fixed-gain steps are predefined. For each of the steps, the transceiver output power can be adjusted to meet the desired total output power.

The key advantages of the smart biasing scheme are:

- Saving current consumption during low output power operation
- Easy programming of fixed-gain steps through the MIPI interface
- Reducing the required output dynamic range of the transceiver

MIPI® RFFE Controller Interface

The SKY68020-11 is fully-controllable by a single MIPI interface to drive the PA in various optimized bias modes as well as providing band selection and controlling the antenna switch TX, RX, and band selection.

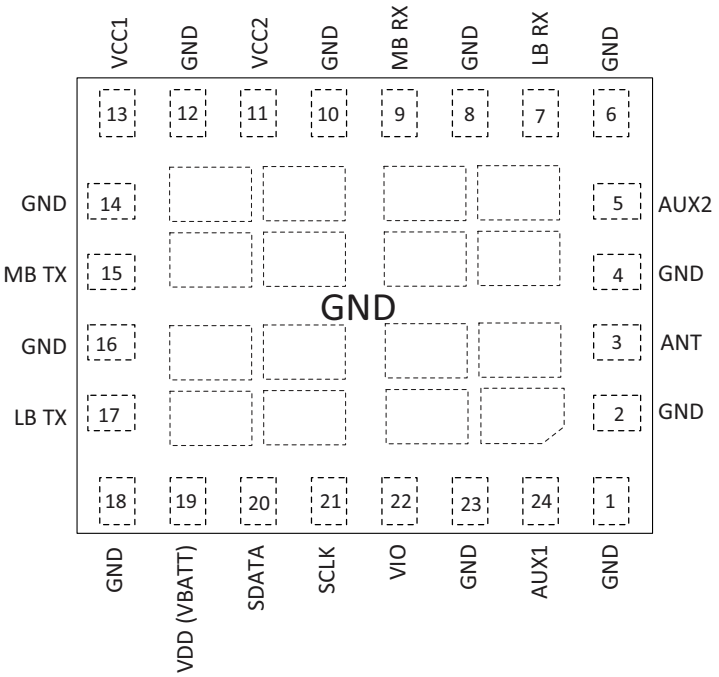

Figure 2. Pinout (Top View)

Table 1. Signal Descriptions

Pin	Name	Description	Pin	Name	Description
1	GND	Ground	13	VCC1	PA stage 1 supply
2	GND	Ground	14	GND	Ground
3	ANT	Antenna port[1]	15	MB TX	Mid-band TX input[1]
4	GND	Ground	16	GND	Ground
5	AUX2	Auxiliary port 2[1]	17	LB TX	Low-band TX input[1]
6	GND	Ground	18	GND	Ground
7	LB RX	Low-band RX[1]	19	VDD (VBATT)	DC supply voltage
8	GND	Ground	20	SDATA	Serial data input
9	MB RX	Mid-band RX[1]	21	SCLK	Serial clock input
10	GND	Ground	22	VIO	Interface dc supply voltage
11	VCC2	PA stage 2 supply	23	GND	Ground
12	GND	Ground	24	AUX1	Auxiliary port 1[1]

1. For pin 17 (LB TX), no dc blocking cap is needed.
For pin 3 (ANT), Pin 5 (AUX2), pin 7 (LB RX), pin 9 (MB RX), pin 15 (MB TX), and pin 24 (AUX1), dc blocking caps are needed if dc is applied.

Electrical Specifications

For all tables, performance is assured only under the conditions listed and is not invariant over the full operating or storage temperature ranges. Operation at elevated temperatures may reduce reliability of the device.

Table 2. Absolute Maximum Ratings[1]

Parameter	Symbol	Min	Max	Units
RF input power MB TX, LB TX port (CW)	P_{IN}		10	dBm
RF input power AUX port (pulsed, 25% duty cycle)			37.5	
Supply voltage No RF	V_{CC1}, V_{CC2}	–0.5	6.0	V
Supply voltage With RF	VDD (VBATT)	–0.5	5.2	
Digital control lines	VIO, SCLK, SDATA	–0.5	2	
Operating case temperature	T_{CASE}[2]	–40	+105	°C
Storage temperature	TSTG	–40	+150	
Electrostatic discharge (ESD) Human Body Model (HBM)	ESD		1	kV

1. Exposure to maximum rating conditions for extended periods may reduce device reliability. Exceeding any of the limits listed here may result in permanent damage to the device.
2. T_{CASE} refers to the temperature of the ground pad on the underside of the package.

ESD Handling: *Industry-standard ESD handling precautions must be adhered to at all times to avoid damage to this device.*

Table 3. Recommend Operating Conditions

Parameter	Symbol	Min	Typ	Max	Units
Supply voltage	$V_{CC1_POUT_MAX}$	2.85	3.1	4.5	V
	$V_{CC2_POUT_MAX}$	2.85	3.1	4.5	
	V_{CC1_APT}	0.55	3.1	4.5	
	V_{CC2_APT}	0.55	3.1	4.5	
	VDD (VBATT)	2.85	3.1	4.5	
MIPI RFFE supply	VIO	1.65	1.8	1.95	V
MIPI RFFE signal levels for SCLK, SDATA, low	V_{MIPI_LOW}	0.0	0.0	0.2 x VIO	V
MIPI RFFE signal levels for SCLK, SDATA, high	V_{MIPI_HIGH}	0.8 x VIO	1.8	VIO	
Leakage current (module OFF): V_{DD} = V_{CC1} = V_{CC2} = 3.1 V	I_{LEAK}		0.4		µA
Case operating temperature range	T_{RANGE}	–40	+25	+85	°C

Table 4. Low-Band TX Electrical Specifications

(VDD [VBATT] = V_{CC1} = V_{CC2} = 3.1 V, T_{CASE} = +25 °C, LTE Low-Band, f = 782 MHz, QPSK/1.4 MHz BW/6RB (MPR = 0), Unless Otherwise Specified)

Parameter	Symbol	Conditions	Min	Typ	Max	Units
Frequency	f		663		915	MHz
Maximum linear output power	P_{OUT_MAX}		24			dBm
	$P_{OUT_MAX_ETC}$[1]		23			
Power gain	G_P	P_{OUT} = P_{OUT_MAX}	25.5		32	dB
	G_{P_ETC}	P_{OUT} = $P_{OUT_MAX_ETC}$, T_{CASE} = T_{RANGE}	24		33	
Gain variation over linear power range[2]	$G_{\Delta_PIN_RANGE}$	P_{OUT} = +10 dBm ~ P_{OUT_MAX}	–1		+1	dB
Power-added efficiency	PAE	P_{OUT} = P_{OUT_MAX}		27		%
Quiescent current	I_{CQ}	No RF		60		mA
Total supply current	$I_{_TOT_POUT_MAX}$	P_{OUT_MAX}		300		mA
Adjacent channel leakage ratio (based on 5 MHz LTE channels), 6 RB transmitted signal on RB 19 through 24, EUTRA	$EUTRA_{_ACLR1}$ (power measured in adjacent 5 MHz LTE channel)	P_{OUT} = P_{OUT_MAX}		–38	–34	dBc
		T_{CASE} = T_{RANGE}			–33	
Adjacent channel leakage ratio (based on 5 MHz LTE channels), 6 RB transmitted signal on RB 19 through 24, UTRA1	$UTRA_{_ACLR1}$ (power measured in adjacent 3.84 MHz UTRA channel)	P_{OUT} = P_{OUT_MAX}		–43	–37	
		T_{CASE} = T_{RANGE}			–36	
Modulation accuracy	$EVM_{_QPSK}$	Load = 50 Ω, T_{CASE} = T_{RANGE}		3	5	%
Harmonics, second	2fo	P_{OUT} = P_{OUT_MAX}		–50	–45	dBm/MHz
Harmonics, second (B71)	2fo			–40	–35	
Harmonics, second (B28)	2fo			–55	–50	
Harmonics, second (B13)	2fo			–60	–55	
Harmonics, third	3fo			–50	–45	
Harmonics, third (B71)	3fo			–45	–40	
Harmonics, third (B28)	3fo			–52	–47	
Harmonics, fourth and higher	4fo			–55	–50	

Table 4. Low-Band TX Electrical Specifications (Continued)

(VDD [VBATT] = V_{CC1} = V_{CC2} = 3.1 V, T_{CASE} = +25 °C, LTE Low-Band, f = 782 MHz, QPSK/1.4 MHz BW/6RB (MPR = 0), Unless Otherwise Specified)

Parameter	Symbol	Conditions	Min	Typ	Max	Units
Harmonic gain, second	2fo	P_{IN} = –5 dBm		–40		dB
Harmonic gain, third	3fo			–50		
Harmonic gain, fourth and higher	4fo			–45		
Noise during B12 TX LB (B12) noise in B12 RX band	$P_{NOISE_Emissions_Bands}$	f_{MEAS} = 729 MHz[3]		–65		dBm/MHz
Noise during B12 TX LB (B12) noise in B17 RX band		f_{MEAS} = 734 MHz[3]		–65		
Noise during B12 TX LB (B12) noise in GPS band		f_{MEAS} = 1574.42 to 1576.42 MHz[3]		–85		
Noise during B12 TX LB (B12) noise in GNSS band		f_{MEAS} = 1559.00 MHz to 1574.42 MHz[3]		–85		
		f_{MEAS} = 1576.42 MHz to 1610.00 MHz[3]		–85		
Noise during B13 TX LB (B13) noise in B13 RX band	$P_{NOISE_Emissions_Bands}$	f_{MEAS} = 756 MHz[4]		–65		dBm/MHz
Noise during B13 TX LB (B13) noise in B14 RX band		f_{MEAS} = 768 MHz[4]		–60		dBm/MHz
Noise during B13 TX LB (B13) noise in public safety (NS_07)		f_{MEAS} = 775 MHz[4,5]		–60	–57	dBm/6.25 kHz
Noise during B13 TX LB (B13) noise in GPS band		f_{MEAS} = 1574.42 to 1576.42 MHz[6]		–75		dBm/MHz
Noise during B13 TX LB (B13) noise in GNSS band		f_{MEAS} = 1559.00 MHz to 1574.42 MHz[6]		–50		
		f_{MEAS} = 1576.42 MHz to 1610.00 MHz[6]		–75		

Table 4. Low-Band TX Electrical Specifications (Continued)

(VDD [VBATT] = V_{CC1} = V_{CC2} = 3.1 V, T_{CASE} = +25 °C, LTE Low-Band, f = 782 MHz, QPSK/1.4 MHz BW/6RB (MPR = 0), Unless Otherwise Specified)

Parameter	Symbol	Conditions	Min	Typ	Max	Units
Input return loss	$RL_{_TX}$	P_{IN} = –30 dBm		13		dB
ANT port return loss	$RL_{_ANT}$	P_{IN} = –30 dBm		10		dB
Stability	S	No oscillations, all spurious: < –42 dBm/100 kHz @30 MHz ~1 GHz < –36 dBm/MHz @1 GHz ~12.5 GHz P_{OUT} = P_{OUT_MAX} @ load = 50 Ω T_{CASE} = T_{RANGE}	6:1			VSWR
Ruggedness	Ru	No permanent damage to module, P_{OUT} = P_{OUT_MAX} @ load = 50 Ω T_{CASE} = T_{RANGE}	10:1			VSWR

1. ETC = extreme temperature condition, T_{CASE} = –40 °C and +85 °C
2. Variation is reference to the mid-point gain value of the measurement.
3. Measured with +24 dBm TX on 5 MHz LTE channel centered at 713.5 MHz, highest 6 RB.
4. Measured with +24 dBm TX on 5 MHz LTE channel centered at 779.5 MHz, lowest 6 RB.
5. Measured with +22 dBm TX on 5 MHz LTE channel centered at 779.5 MHz, lowest 6 RB.
6. Measured with +24 dBm TX on 5 MHz LTE channel centered at 784.5 MHz, highest 6 RB.

Table 5. Mid-Band TX Electrical Specifications

(VDD [VBATT] = V_{CC1} = V_{CC2} = 3.1 V, T_{CASE} = +25 °C, LTE Low-Band, f = 1732 MHz, QPSK/1.4 MHz BW/6RB (MPR = 0), Unless Otherwise Specified)

Parameter	Symbol	Conditions	Min	Typ	Max	Units
Frequency	f		1695		1980	MHz
Maximum output power	P_{OUT_MAX}		24			dBm
	$P_{OUT_MAX_ETC}$[1]		23			
Power gain	G_{P_HIGH}	P_{OUT} = P_{OUT_MAX}	25.5		32	dB
	$G_{P_HIGH_ETC}$	P_{OUT} = $P_{OUT_MAX_ETC}$ T_{CASE} = T_{RANGE}	23.5		33	
Gain variation over linear power range, AM/AM[2]	$G_{\Delta_PIN_RANGE}$	P_{OUT} = +10 dBm ~ P_{OUT_MAX}	–1		+1	dB
Power-added efficiency	PAE	P_{OUT} = P_{OUT_MAX}		27		%
Quiescent current	I_{CQ}	No RF		80		mA
Total supply current	$I_{_TOT}$	P_{OUT} = P_{OUT_MAX}		300		mA
Adjacent channel leakage ratio (based on 5 MHz LTE channels) 6 RB transmitted signal on RB 19 through 24 EUTRA	$EUTRA_{_ACLR1}$ (power measured in adjacent 5 MHz LTE channel)	P_{OUT} = P_{OUT_MAX}		–38	–34	dBc
		T_{CASE} = T_{RANGE}			–33	

Table 5. Mid-Band TX Electrical Specifications (Continued)

(VDD [VBATT] = V_{CC1} = V_{CC2} = 3.1 V, T_{CASE} = +25 °C, LTE Low-Band, f = 1732 MHz, QPSK/1.4 MHz BW/6RB (MPR = 0), Unless Otherwise Specified)

Parameter	Symbol	Conditions	Min	Typ	Max	Units
Adjacent channel leakage ratio (based on 5 MHz LTE channels) 6 RB transmitted signal on RB 19 through 24 UTRA1	$UTRA_{_ACLR1}$ (power measured in adjacent 3.84 MHz UTRA channel)	$P_{OUT} = P_{OUT_MAX}$		–43	–37	dBc
		$T_{CASE} = T_{RANGE}$			–36	
Modulation accuracy	$EVM_{_QPSK}$	Load = 50 Ω, $T_{CASE} = T_{RANGE}$		3	5	%
Harmonics, second	2fo	$P_{OUT} = P_{OUT_MAX}$		–40	–35	dBm/MHz
Harmonics, third	3fo			–45	–40	
Harmonics, fourth and higher	4fo			–45	–40	
Harmonic gain, second	2fo	P_{IN} = –5 dBm		–30		dB
Harmonic gain, third	3fo			–60		
Harmonic gain, fourth and higher	4fo			–50		
Noise, MB (B4) in B4 RX band	$P_{NOISE_Emissions_Bands}$	f_{MEAS} = 2110 MHz[3]		–50		dBm/MHz
Noise in GPS band		f_{MEAS} = 1574.42 to 1576.42 MHz[4]		–75		
Noise, MB (B4) in GNSS band		f_{MEAS} = 1559.00 MHz to 1574.42 MHz[4] f_{MEAS} = 1576.42 MHz to 1610.00 MHz[4]		–70		
Input return loss	$RL_{_TX}$	P_{IN} = –30 dBm		13		dB
ANT port return loss	$RL_{_ANT}$	P_{IN} = –30 dBm		10		dB
Stability	S	No oscillations, all spurious: < –42 dBm/100 kHz @30 MHz ~1 GHz < –36 dBm/MHz @ 1 GHz ~12.5GHz $P_{OUT} = P_{OUT_MAX}$@ load = 50 Ω $T_{CASE} = T_{RANGE}$	6:1			VSWR
Ruggedness	Ru	No permanent damage to module $P_{OUT} = P_{OUT_MAX}$@ load = 50 Ω $T_{CASE} = T_{RANGE}$	10:1			VSWR

1. ETC = extreme temperature condition, T_{CASE} = –40 °C and +85 °C
2. Variation is referenced to the mid-point gain value of the measurement.
3. Measured with +24 dBm TX on 5 MHz LTE channel centered at 1752.5 MHz, highest 6 RB.
4. Measured with +24 dBm TX on 5 MHz LTE channel centered at 1712.5 MHz, lowest 6 RB.

Table 6. Transmit Ports to Receive Ports Characteristics, Applies to TX/RX Frequency Range

(VDD [VBATT] = V_{CC1} = V_{CC2} = 3.1 V, T_{CASE} = +25 °C, LTE Mid-Band/Low-Band, QPSK/1.4 MHz BW/6RB (MPR = 0), Unless Otherwise Specified)

Parameter	Symbol	Conditions	Min	Typ	Max	Units
LB TX port to LB RX port	LB_TX-LB_RX_ISO	Low-band PA in max gain state, P_{IN} = –5 dBm, f_LB_TX = 782 MHz		20		dB
LB TX port to MB RX port	LB_TX-MB_RX_ISO	Low-band PA in max gain state, P_{IN} = –5 dBm, f_LB_TX = 782 MHz		20		dB

Table 6. Transmit Ports to Receive Ports Characteristics, Applies to TX/RX Frequency Range (Continued)

(VDD [VBATT] = V_{CC1} = V_{CC2} = 3.1 V, T_{CASE} = +25 °C, LTE Mid-Band/Low-Band, QPSK/1.4 MHz BW/6RB (MPR = 0), Unless Otherwise Specified)

Parameter	Symbol	Conditions	Min	Typ	Max	Units
MB TX port to LB RX port	MB_TX-LB_RX_ISO	Mid-band PA in max gain state, P_{IN} = –5 dBm, f_MB_TX = 1732MHz		20		dB
MB TX port to MB RX port	MB_TX-MB_RX_ISO	Mid-band PA in max gain state, P_{IN} = –5 dBm, f_MB_TX = 1732 MHz		6		dB
LB TX port to Aux1 port	LB_TX-AUX1_ISO	Low-band PA in max gain state, P_{IN} = –5 dBm, f_LB_TX = 782 MHz		20		dB
MB TX port to Aux1 port	MB_TX-AUX1_ISO	Mid-band PA in max gain state, P_{IN} = –5 dBm, f_MB_TX = 1732MHz		10		dB
LB TX port to Aux2 port	LB_TX-AUX2_ISO	Low-band PA in max gain state, P_{IN} = –5 dBm, f_LB_TX = 782 MHz		8		dB
MB TX port to Aux2 port	MB_TX-AUX2_ISO	Mid-band PA in max gain state, P_{IN} = –5 dBm, f_MB_TX = 1732 MHz		–2		dB
Aux1 port to LB RX port	AUX1-LB_RX_ISO	Low-band RX port, P_{IN} = –5 dBm, GSM LB f = 880 MHz		45		dB
Aux1 port to MB RX port	AUX1-MB_RX_ISO	Mid-band RX port, P_{IN} = –5 dBm, GSM MB f = 1850 MHz		35		dB
Aux2 port to LB RX port	AUX2-LB_RX_ISO	Low-band RX port, P_{IN} = –5 dBm, GSM LB f = 880 MHz		45		dB
Aux2 port to MB RX port	AUX2-MB_RX_ISO	Mid-band RX port, P_{IN} = –5 dBm, GSM MB f = 1850 MHz		40		dB

Table 7. Low-Band RX

(VDD [VBATT] = V_{CC1} = V_{CC2} = 3.1 V, T_{CASE} = +25 °C, Unless Otherwise Specified)

Parameter	Symbol	Conditions	Min	Typ	Max	Units
Operating frequency	f		617		960	MHz
Insertion loss	RX_IL	617 to 960 MHz		2	2.5	dB
Amplitude ripple	ΔRX_IL	617 to 960 MHz		0.8		dB
RX port return loss	RL_RX	In/out, 50 Ω, 617 to 960 MHz	7	10		dB
ANT port return loss	RL_ANT	In/out, 50 Ω, 617 to 960 MHz	7	10		dB
Second harmonic attenuation	2fo (B71) 2fo	1234 to 1304 MHz 1458 to 1920 MHz		10 25		dB
Third harmonic attenuation	3fo	1851 to 2880 MHz		35		dB
Fourth and higher harmonic attenuation	>3fo	2880 to 6000 MHz		35		dB
Supply current	ICC_RX-LB	LB_RX		0.7		mA

Table 8. Mid-Band RX

(VDD [VBATT] = V_{CC1} = V_{CC2} = 3.1 V, T_{CASE} = +25 °C, Unless Otherwise Specified)

Parameter	Symbol	Conditions	Min	Typ	Max	Units
Operating frequency	f		1805		2200	MHz
Insertion loss	RX_IL	1805 to 2200 MHz		2	2.5	dB
Amplitude ripple	ΔRX_IL	1805 to 2200 MHz		0.5		dB
RX port return loss	RL_RX	In/out, 50 Ω, 1805 to 2200 MHz	7	10		dB
ANT port return loss	RL_ANT	In/out, 50 Ω, 1805 to 2200 MHz	7	10		dB
Second harmonic attenuation	2f0	3610 to 4400 MHz		30		dB
Third harmonic attenuation	3f0	5415 to 6600 MHz		35		dB
Supply current	ICC_RX-MB	MB_RX		0.7		mA

Table 9. AUX Port

(VDD [VBATT] = V_{CC1} = V_{CC2} = 3.1 V, T_{CASE} = +25 °C, Unless Otherwise Specified)

Parameter	Symbol	Conditions	Min	Typ	Max	Units
AUX1 port insertion loss	IL_AUX	0.4 to 1.0 GHz 1.4 to 2.0 GHz 2.0 to 2.7 GHz		0.4 0.5 0.6		dB
AUX1 port return loss	RL_AUX	In/out, 50 Ω 0.4 to 2.7 GHz	7	10		dB
AUX1 port compression point, P0.1dB	P0.1dB_AUX	0.7 to 2.7 GHz		38		dBm
AUX1 port third order input intercept point	IP3_AUX	0.7 to 2.7 GHz		70		dBm
AUX2 port insertion loss	IL_AUX	0.4 to 1.0 GHz 1.4 to 2.0 GHz 2.0 to 2.7 GHz		0.4 0.5 0.6		dB
AUX2 port return loss	RL_AUX	In/out, 50 Ω, 0.4 to 2.7 GHz	7	10		dB
AUX2 port compression point, P0.1dB	P0.1dB_AUX	AUX1 port, 0.7 to 2.7 GHz		38		dBm
AUX2 port third order input intercept point	IP3_AUX	AUX1 port, 0.7 to 2.7 GHz		70		dBm

Table 10. Timing Specification

Parameter	Symbol	Conditions	Min	Typ	Max	Units
Turn-on time	t_{ON}	Time required to enable internal supplies		50	150	µs
Mode switching time	t_{SW}	Time required to switch between modes		5	15	µs

Evaluation Board Description

An evaluation board is used to test the performance of the SKY68020-11. An assembly diagram is provided in Figure 3, and a schematic diagram is shown in Figure 4.

Note: *For pin 17 (LB TX), no dc blocking cap is needed.*
For pin 3 (ANT), pin 5 (AUX2), pin 7 (LB RX), pin 9 (MB RX), pin 15 (MB TX), and pin 24 (AUX1), dc blocking caps are needed if dc is applied.

Refer to Figure 4, Note 1 for important V_{CC1} and V_{CC2} layout information.

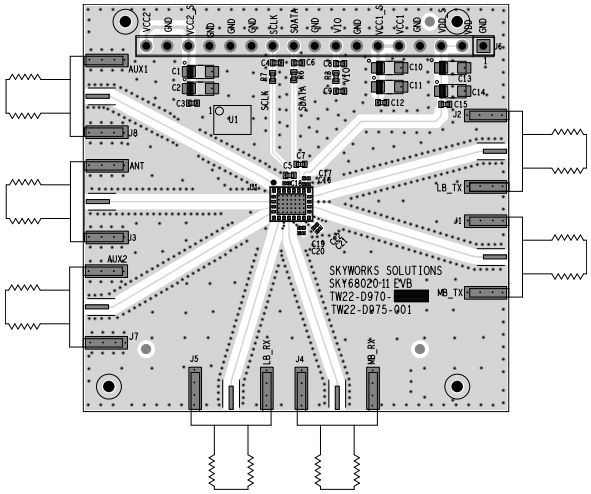

Figure 3. Evaluation Board Assembly Diagram

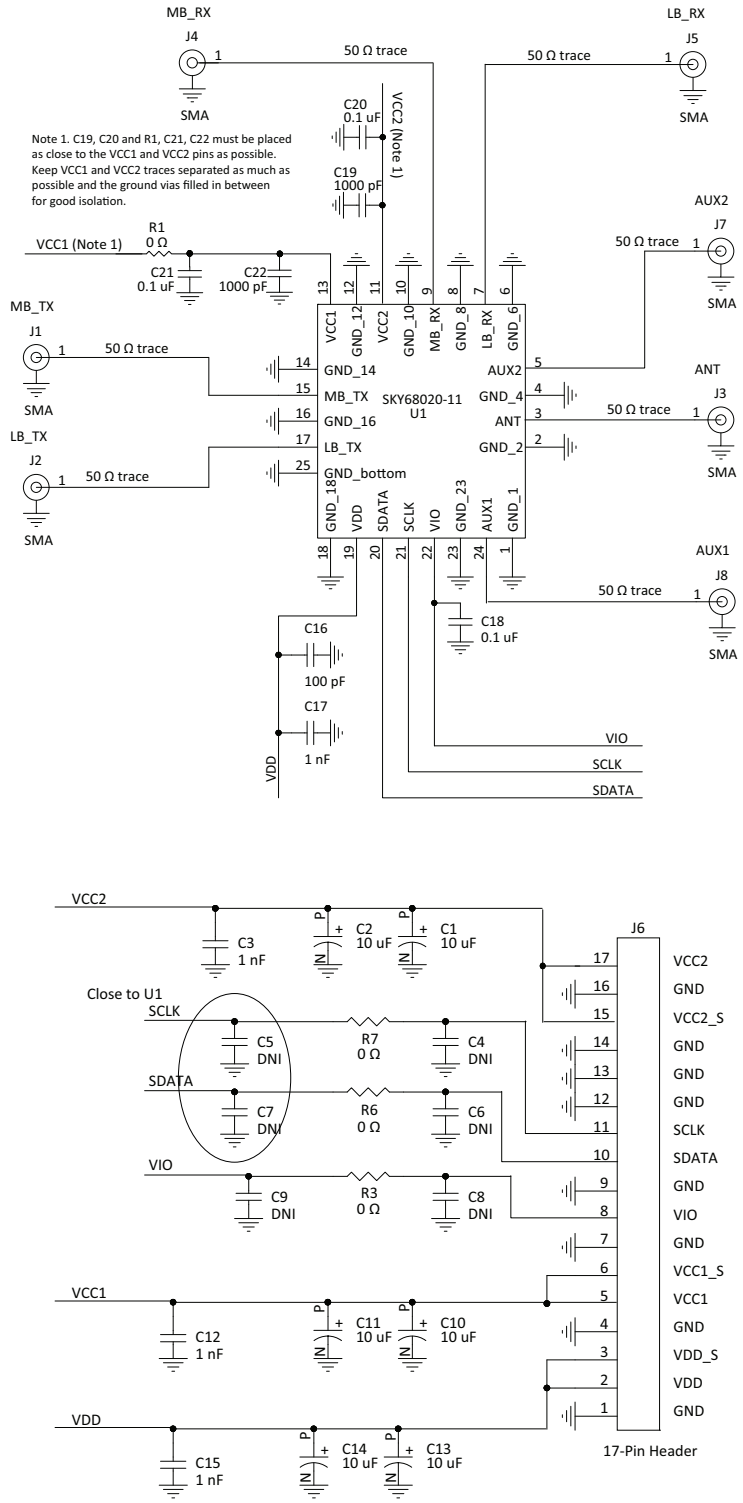

Figure 4. Evaluation Board Schematic

MIPI® RFFE Information

Timing Requirement Description

Figure 5 specifies the programming sequences required to switch the SKY68020-11 among OFF, RX, and TX modes. All wait times shown in Figure 5 are the required minimum values.

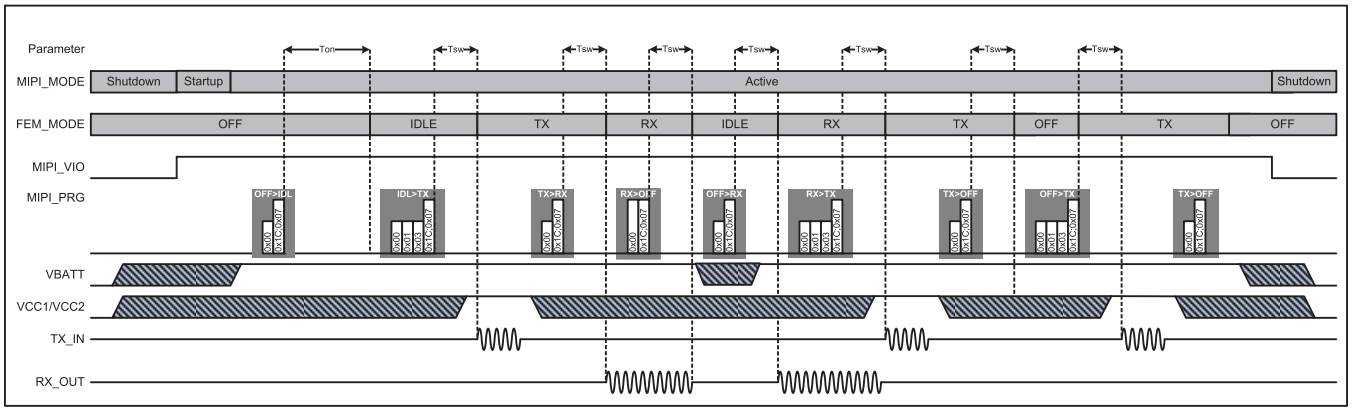

Figure 5. MIPI® RFFE On/Off Timing Chart

MIPI Programming Description

Figures 6, 7, and 8 show generalized command sequences to write-to and read-from the register. Figures 9 and 10 show the extended command sequences to write-to and read-from the register. Table 11 shows the read and write command sequence bit definitions. Table 12 shows the programming registers for the SKY68020-11.

Table 11. MIPI® RFFE - Basic Register Write/Read Commands

Components of an RFFE Message: Start Sequence Condition (SSC), Command Frame, Data/ Address Frame, Bus Park Cycle																
Desc	**SSC**		**Command Frame**										**Data Frame**			
Register write			SA[3:0]	0	1	0	0	0	0	0	0	P	Data[0:7]	P	BP	
							Address[4:0]									
							1	1	1	1	1					
Register read			SA[3:0]	0	1	1	0	0	0	0	0	P	BP	Data[0:7]	P	BP
							Address[4:0]									
							1	1	1	1	1					
Register 0 write			SA[3:0]	1	0	0	0	0	0	0	0	P	BP			
							Data[6:0]									
					1	1	1	1	1	1	1					

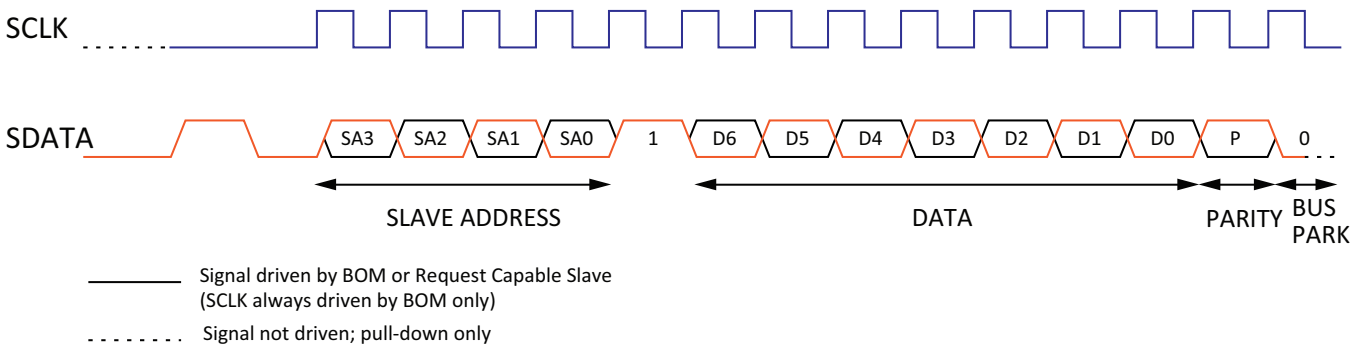

Figure 6. MIPI® RFFE Register Zero Write Command

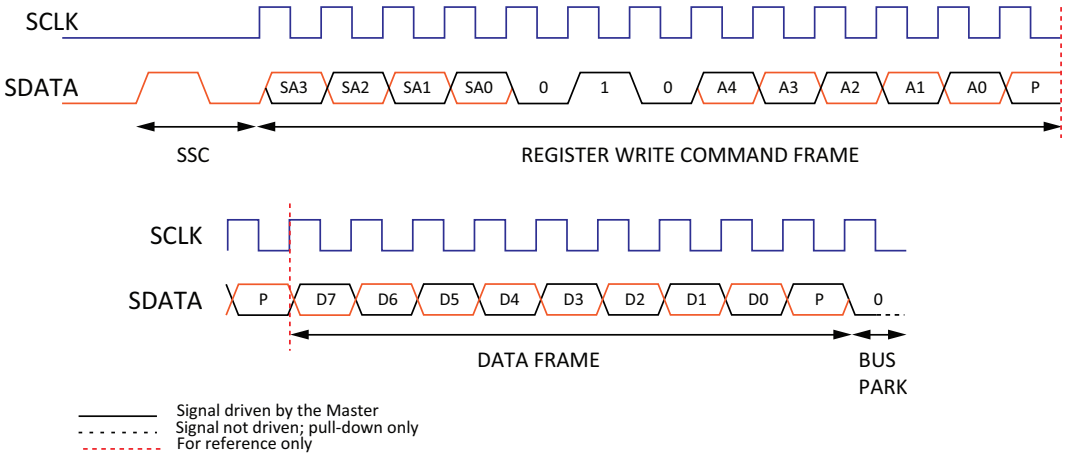

Figure 7. MIPI® RFFE Register Write Command

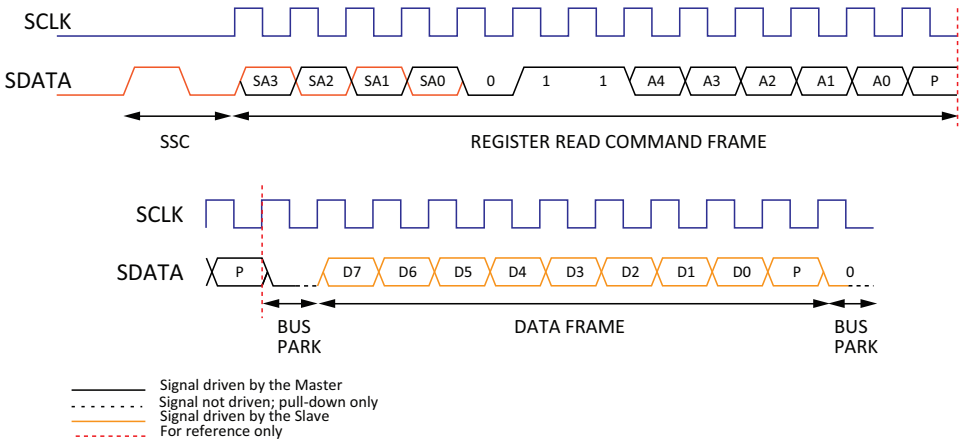

Figure 8. MIPI® RFFE Register Read Command

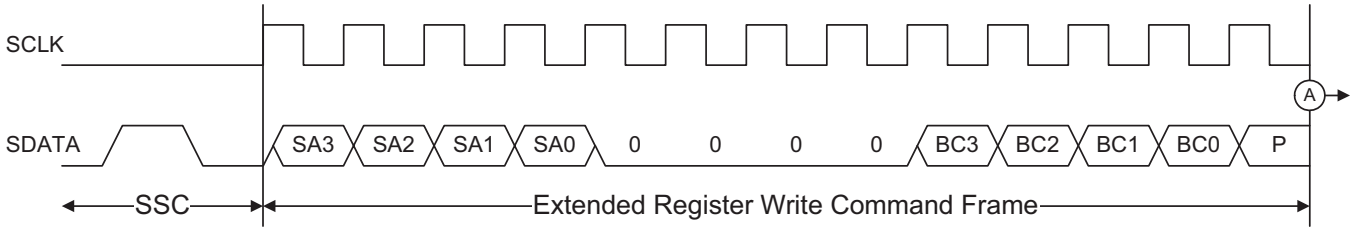

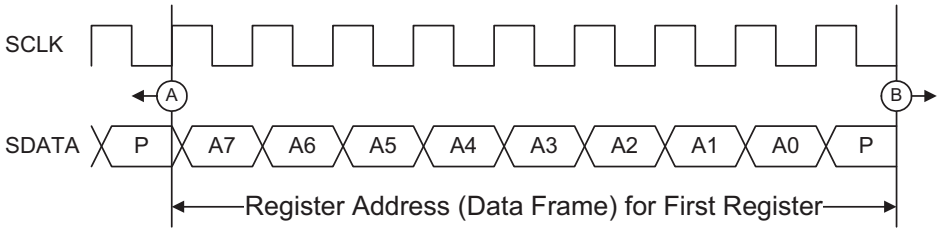

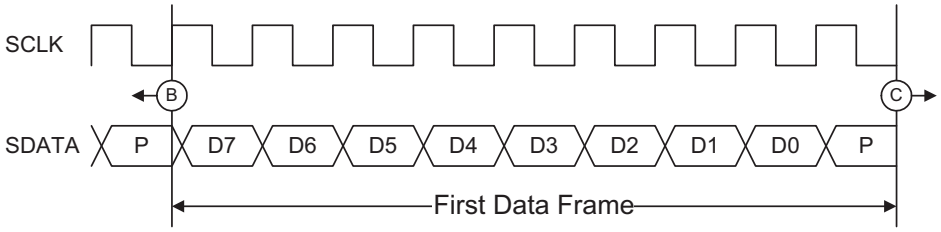



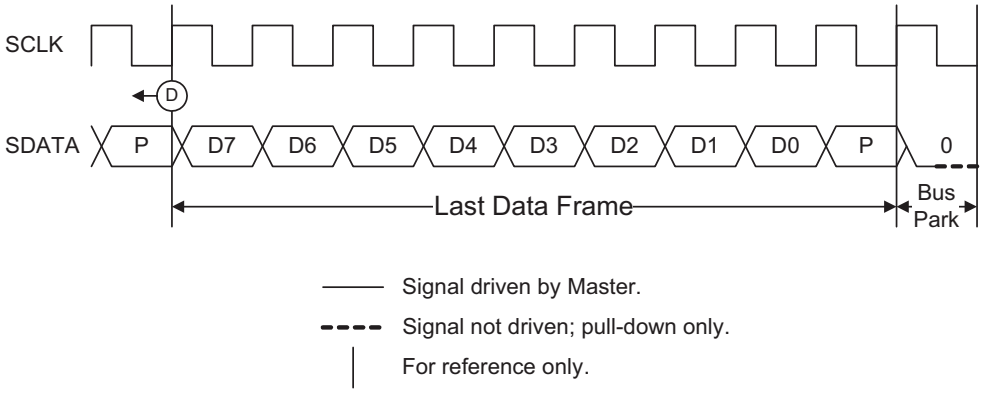

Figure 9. Extended Command Sequences to Write-to the Register

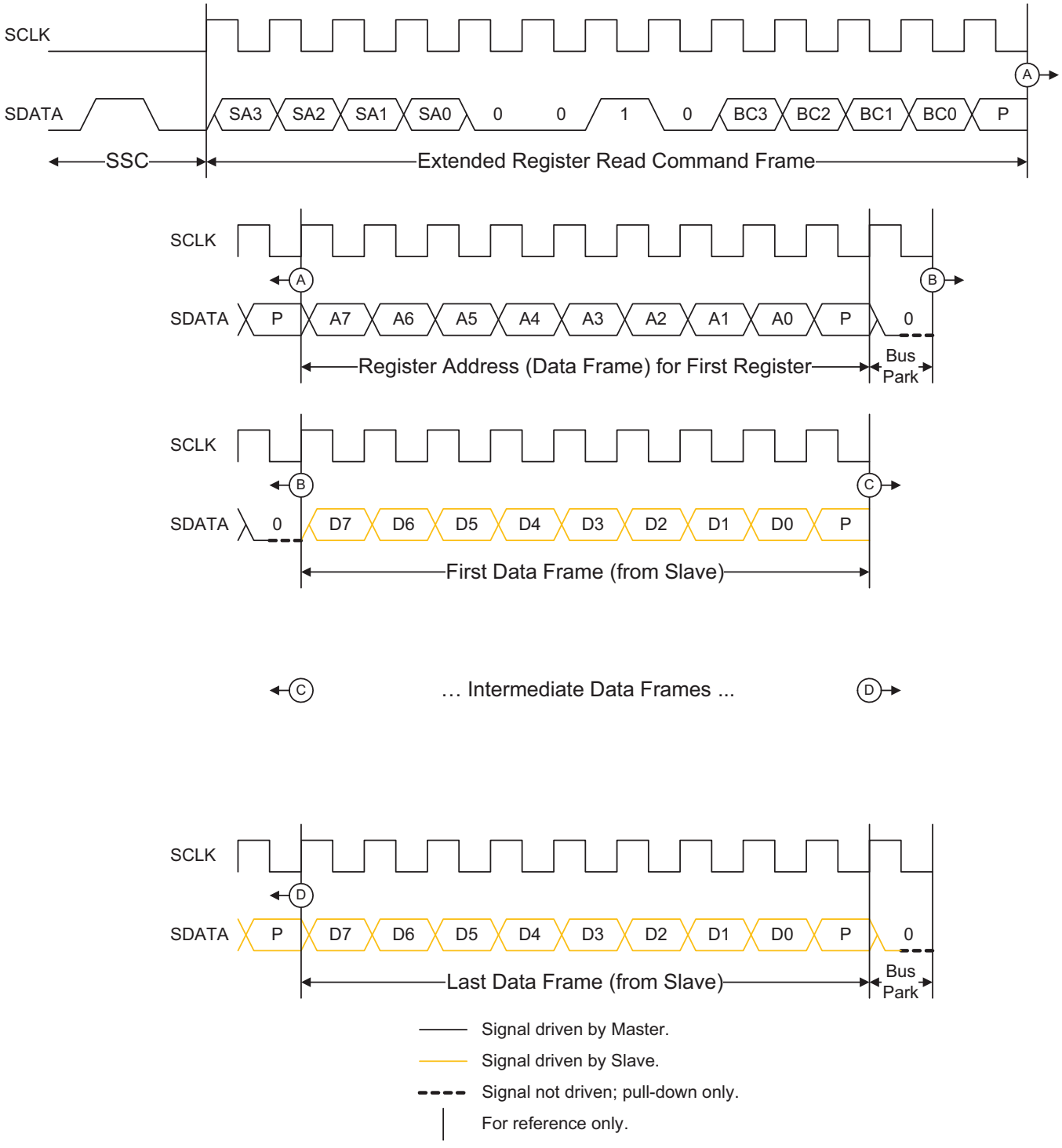

Figure 10. Extended Command Sequences to Read-from the Register

Table 12. MIPI® RFFE Standard Register Map

Register Address (Hexadecimal)	Register Name	Data Bits	Bit Name	Defaults (Binary 7:0)	Broadcast_ID Support	Trigger Support	R/W	Comments
0x00	MODE_CTRL	7	Reserved	0	No	Trigger0	R/W	Set to 1
		6:3	Mode [3:0]	0000			R/W	0000 = Module OFF 0001 = MB_RX 0010 = LB_RX 0011 = LB_TX 0110 = AUX1 0111 = AUX2 1000 = MB_TX 1111 = Idle All other modes = Reserved
		2	Module_Enable	0			R/W	0 = Module OFF 1 = Module ON
		1	Reserved	0			R/W	Set to 0
		0	Master Bias	0			R/W	0 = Bias enabled 1 = Bias disabled
0x01	POWER_CTRL1	7:0	BIAS3[7:4] Final PA Bias	0000	No	Trigger0	R/W	RX Mode: 0000 TX Mode: See Table 13
			BIAS2[3:0] Driver PA Bias	0000				RX Mode: 0000 TX Mode: See Table 13
0x03	POWER_CTRL2	7	Reserved	0	No	Trigger0	R/W	Set to 1
		6:4	Reserved	000				Set to 000
		3:0	BIAS1 [3:0] Boost PA Bias	0000				RX Mode: 0000 TX Mode: See Table 13
0x1A	RFFE_STATUS	7	SOFTWARE_RESET	0	No	No	R/W	Reset all configurable registers to default values except for USID, GROUP_SID, and PM_TRIG. The RFFE_STATUS register shall reset after it is read. 0: normal operation 1: software reset
		6	COMMAND_FRAME_PARITY_ERR	0				Command sequence received with parity error - discard command. The RFFE_STATUS register shall reset after it is read.
		5	COMMAND_LENGTH_ERR	0				Command length error. The RFFE_STATUS register shall reset after it is read.
		4	ADDRESS_FRAME_PARITY_ERR	0				Address frame with parity error. The RFFE_STATUS register shall reset after it is read.
		3	DATA_FRAME_PARITY_ERR	0				Data frame with parity error. The RFFE_STATUS register shall reset after it is read.
		2	READ_UNUSED_REG	0				Read command to an invalid address. The RFFE_STATUS register shall reset after it is read.

Table 12. MIPI® RFFE Standard Register Map (Continued)

Register Address (Hexadecimal)	Register Name	Data Bits	Bit Name	Defaults (Binary 7:0)	Broadcast_ID Support	Trigger Support	R/W	Comments
0x1A	RFFE_STATUS	1	WRITE_UNUSED_REG	0	No	No	R/W	Write command to an invalid address. The RFFE_STATUS register shall reset after it is read.
		0	BID_GID_ERR	0				Read command with a BROADCAST_ID or GROUP_ID. The RFFE_STATUS register shall reset after it is read.
0x1B	GROUP_SID	7:4	RESERVED[3:0]	0000	No	No	R/W	Reserved
		3:0	GROUP_SID[3:0]	0000				Group slave ID

Table 12. MIPI® RFFE Standard Register Map (Continued)

Register Address (Hexadecimal)	Register Name	Data Bits	Bit Name	Defaults (Binary 7:0)	Broadcast_ID Support	Trigger Support	R/W	Comments
0x1C	PM_TRIG	7:6	PWR_MODE [1:0]	10	Yes	No	R/W	When an RFFE Slave is initially powered up and comes out of reset, it enters STARTUP. During STARTUP all Slave registers shall be set to their default settings. Following STARTUP the Slave shall transition to ACTIVE but immediately transitions into LOW POWER to avoid requiring a write on the bus to configure the devices explicitly to LOW POWER. When the Slave is in LOW POWER, charge pumps shall be disabled and the Slave shall be listening to the RFFE bus. 00: Normal operation (ACTIVE) 01: Default Settings (STARTUP) 10: Low power (LOW POWER) 11: Reserved
		5	TRIGGER_MASK_2	0	No	No		If this bit is set, trigger 2 is disabled. When disabled, if writing to a register that is associated to trigger 2, the data goes directly to the destination register.
		4	TRIGGER_MASK_1	0				If this bit is set, trigger 1 is disabled. When disabled, if writing to a register that is associated to trigger 1, the data goes directly to the destination register.
		3	TRIGGER_MASK_0	0				If this bit is set, trigger 0 is disabled. When disabled, if writing to a register that is associated to trigger 0, the data goes directly to the destination register.
		2	TRIGGER_2	0	Yes	No		A write of a one to this bit loads trigger 2 registers.
		1	TRIGGER_1	0				A write of a one to this bit loads trigger 1 registers.
		0	TRIGGER_0	0				A write of a one to this bit loads trigger 0 registers.
0x1D	PRODUCT_ID	7:0	PRODUCT_ID [7:0]	0x20	No	No	R	
0x1E	MANUFACTURER_ID	7:0	MANUFACTURER_ID [7:0]	0xA5	No	No	R	
0x1F	MAN_USID	7:6	RESERVED	00	No	No	R	
		5:4	MANUFACTURER_ID [9:8]	01			R	
		3:0	USID[3:0]	0xF			R/W	
0x20	EXT_PRODUCT_ID	7:0	EXT_PROD_ID	00000000	No	No	R	

Table 12. MIPI® RFFE Standard Register Map (Continued)

Register Address (Hexadecimal)	Register Name	Data Bits	Bit Name	Defaults (Binary 7:0)	Broadcast_ID Support	Trigger Support	R/W	Comments
0x21	REVISION_ID	7:6	MAJOR REV	00	No	No	R	
		5:4	MINOR REV	00	No	No	R	
		3:0	MISC VARIANTS	0000	No	No	R	
0x23	SW_RST	7	SOFTWARE RESET	0	No	No	R/W	
		6:0	RESERVED	0000000	No	No	R/W	
0x24	ERR_SUM	7:0	ERROR CONDITIONS	00000000	No	No	R/W	

Table 13. MIPI® RFFE Command Look-Up Table

Mode	Freq Low (MHz)	Freq High (MHz)	RF Output Power (dBm)	MIPI® RFFE Commands											
				MIPI Command 1			MIPI Command 2			MIPI Command 3			MIPI Command 4		
				USID[1]	ADDR	DATA	USID[1]	ADDR	DATA	USID[1]	ADDR	DATA	USID[1]	ADDR	DATA
IDLE				F	0	FD	F	1	0	F	3	80	F	1C	7
OFF				F	0	80	F	1	0	F	3	80	F	1C	7
AUX1	400	2700		F	0	B4	F	1	0	F	3	80	F	1C	7
AUX2	400	2700		F	0	BC	F	1	0	F	3	80	F	1C	7
RX_LB	617	960		F	0	94	F	1	0	F	3	80	F	1C	7
RX_MB	1805	2170		F	0	8C	F	1	0	F	3	80	F	1C	7
TX_LB	663	716	25	F	0	9C	F	1	86	F	3	80	F	1C	7
	777	798	25	F	0	9C	F	1	56	F	3	8B	F	1C	7
	814	862	25	F	0	9C	F	1	48	F	3	8B	F	1C	7
	880	915	25	F	0	9C	F	1	39	F	3	8A	F	1C	7
	699	915	10	F	0	9C	F	1	25	F	3	80	F	1C	7
	699	915	5	F	0	9C	F	1	23	F	3	80	F	1C	7
	699	915	–5	F	0	9C	F	1	21	F	3	80	F	1C	7
	699	915	–15	F	0	9C	F	1	1	F	3	80	F	1C	7
	699	915	–20	F	0	9C	F	1	10	F	3	80	F	1C	7

Table 13. MIPI® RFFE Command Look-Up Table (Continued)

Mode	Freq Low (MHz)	Freq High (MHz)	RF Output Power (dBm)	MIPI® RFFE Commands											
				MIPI Command 1			MIPI Command 2			MIPI Command 3			MIPI Command 4		
				USID[1]	ADDR	DATA	USID[1]	ADDR	DATA	USID[1]	ADDR	DATA	USID[1]	ADDR	DATA
TX_MB	1695	1785	25	F	0	C4	F	1	76	F	3	8A	F	1C	7
	1850	1915	25	F	0	C4	F	1	47	F	3	8A	F	1C	7
	1920	1980	25	F	0	C4	F	1	58	F	3	8A	F	1C	7
	1710	1980	10	F	0	C4	F	1	44	F	3	80	F	1C	7
	1710	1980	5	F	0	C4	F	1	23	F	3	80	F	1C	7
	1710	1980	–10	F	0	C4	F	1	22	F	3	80	F	1C	7
	1710	1980	–15	F	0	C4	F	1	11	F	3	80	F	1C	7
	1710	1980	–20	F	0	C4	F	1	10	F	3	80	F	1C	7
MIPI RFFE Registers:				Register 0x00 MODE_CTRL			Register 0x01 POWER_CTRL1			Register 0x03 POWER_CTRL2			Register 0x1C PM_TRIG		

1. MIPI RFFE commands shown with USID set to default value of 0x0F.

Package and Handling Information

Since the device package is sensitive to moisture absorption, it is baked and vacuum packed before shipping. Instructions on the shipping container label regarding exposure to moisture after the container seal is broken must be followed. Otherwise, problems related to moisture absorption may occur when the part is subjected to high temperature during solder assembly.

The SKY68020-11 is rated to Moisture Sensitivity Level 3 (MSL3) at 260 °C. It can be used for lead or lead-free soldering. For additional information, refer to the Skyworks Application Note, “Solder Reflow Information,” document number 200164.

Care must be taken when attaching this product, whether it is done manually or in a production solder reflow environment. Product production quantities are shipped in a standard tape and reel format.

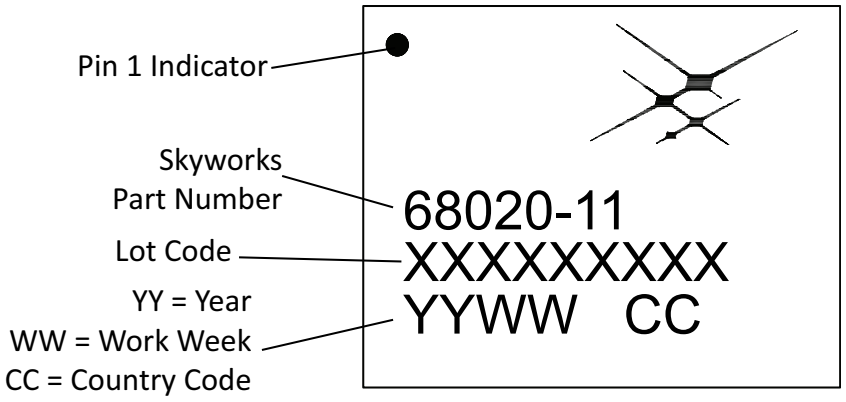

Figure 11. Typical Part Marking

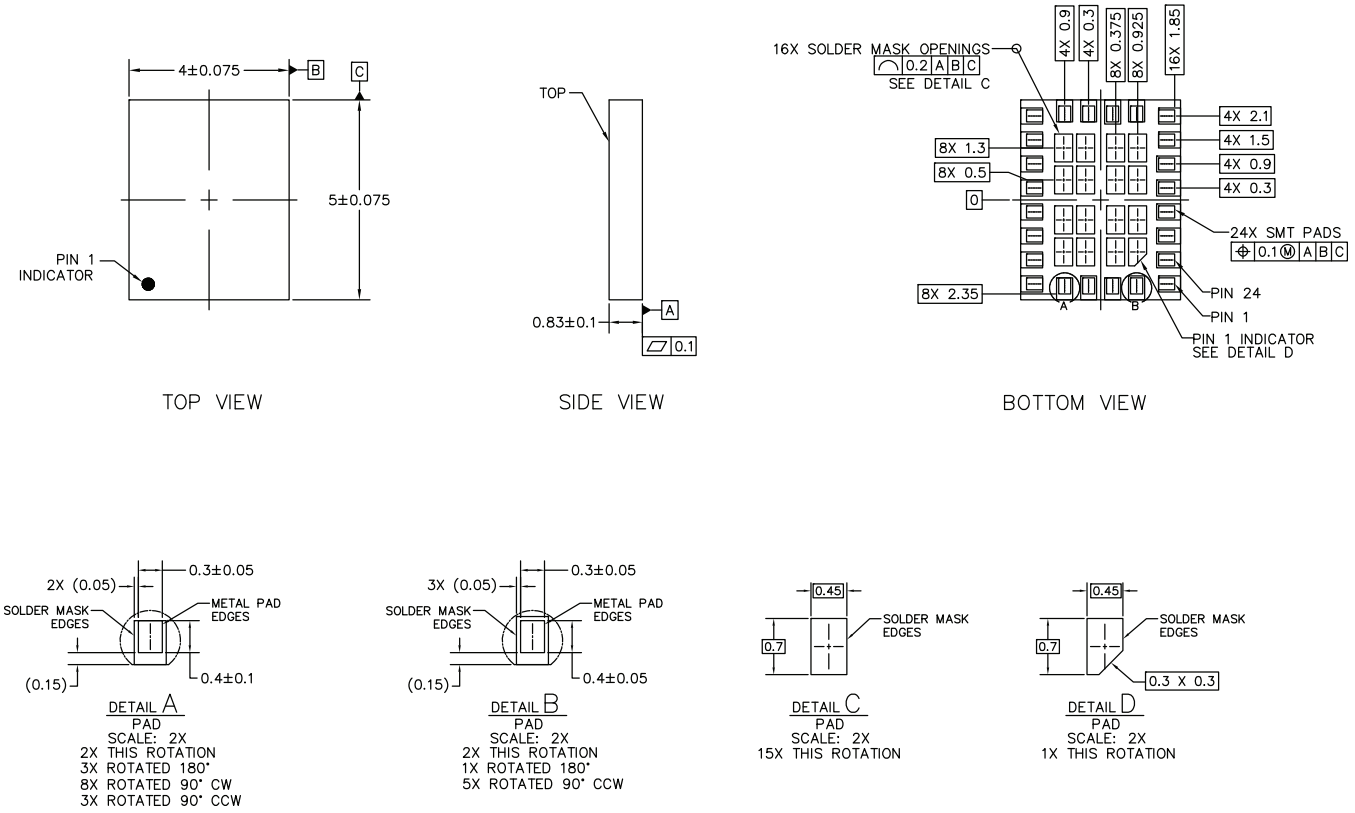

NOTES: UNLESS OTHERWISE SPECIFIED.

1. DIMENSIONING AND TOLERANCING IN ACCORDANCE WITH ASME Y14.5M–1994.
2. DIMENSIONS ARE IN MILLIMETERS
3. PAD DEFINITIONS PER DETAILS ON DRAWING.

Figure 12. Package Dimensions

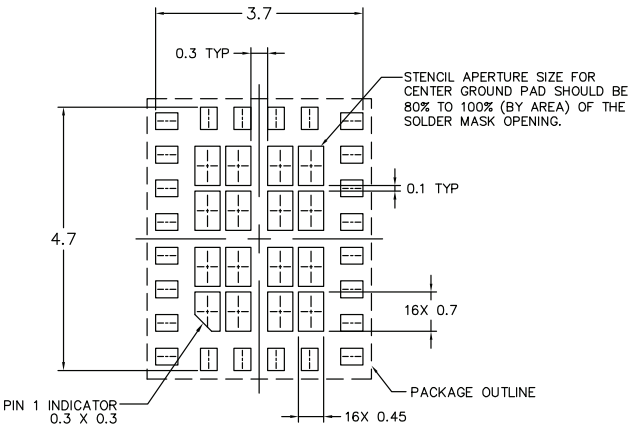

STENCIL APERTURE
TOP VIEW

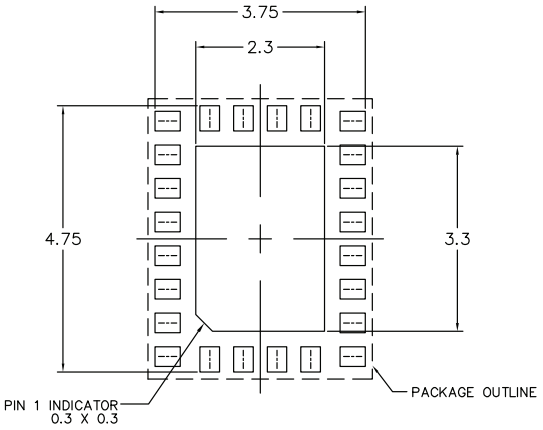

SOLDER MASK OPENING
TOP VIEW

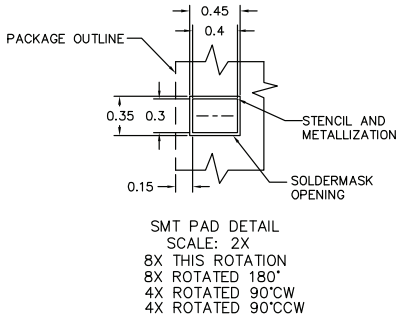

SMT PAD DETAIL
SCALE: 2X
8X THIS ROTATION
8X ROTATED 180°
4X ROTATED 90°CW
4X ROTATED 90°CCW

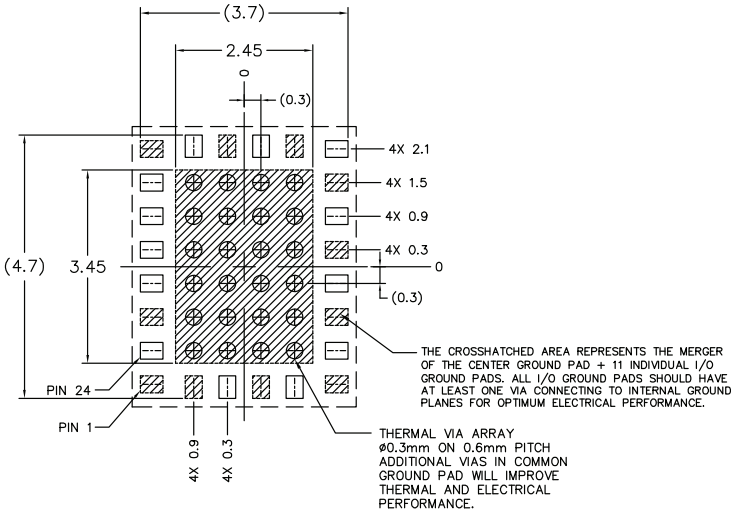

METALLIZATION
TOP VIEW

NOTES:
1. DIMENSIONS ARE IN MILLIMETERS, UNLESS OTHERWISE SPECIFIED.
2. THERMAL VIAS SHOULD BE RESIN FILLED AND CAPPED IN ACCORDANCE WITH IPC–4761 TYPE VII VIAS. 30–35UM Cu THICKNESS IS RECOMMENDED.

Figure 13. PCB Layout Footprint

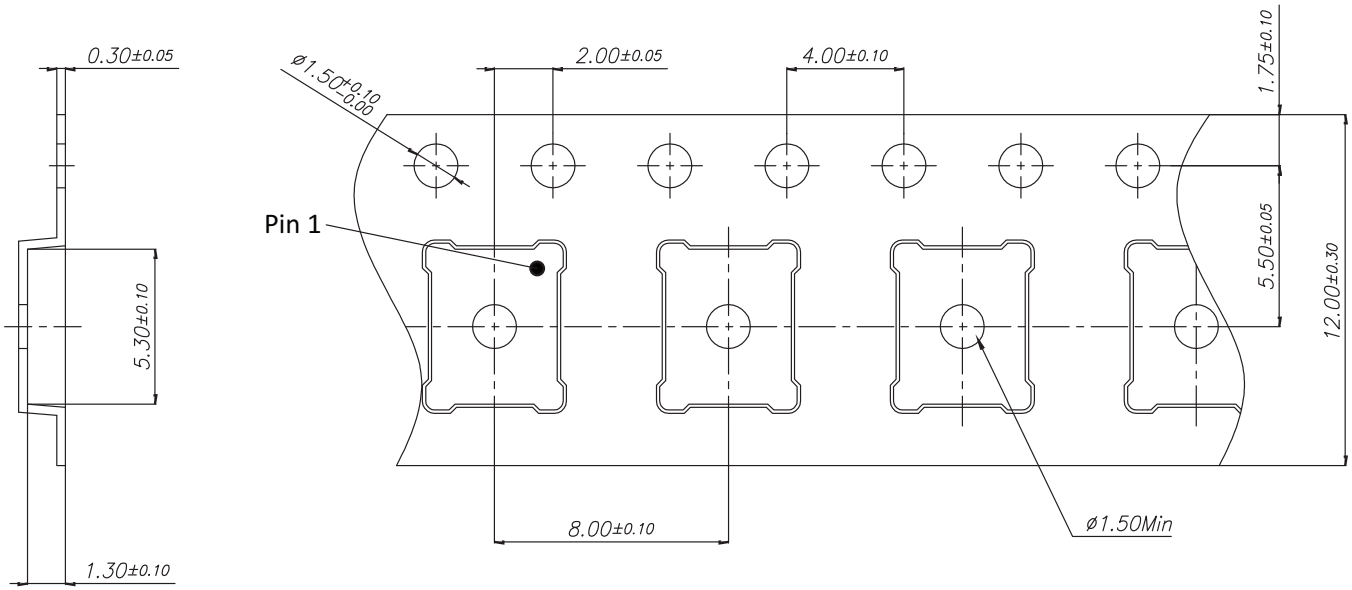

NOTES:

1. 10 SPROCKET HOLE PITCH CUMULATIVE TOLERANCE : ±0.20mm
2. Ao & Bo MEASURED ON PLANE 0.30mm ABOVE THE BOTTOM OF THE POCKET.
3. ALL DIMENSIONS ARE IN MILLIMETERS.

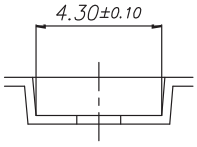

Figure 14. Tape and Reel Information

Ordering Information

Part Number	Description	Evaluation Board Part Number
SKY68020-11	LTE Universal Multi-Band Front-End Module for IoT Applications	SKY68020-11EK1

Copyright © 2017-2020, 2022, 2026, Skyworks Solutions, Inc. All Rights Reserved.

Information in this document is provided in connection with Skyworks Solutions, Inc., and its subsidiaries (“Skyworks”) products or services. These materials, including the information contained herein, are provided by Skyworks as a service to its customers and may be used for informational purposes only by the customer. Skyworks assumes no responsibility for errors or omissions in these materials or the information contained herein. Skyworks may change its documentation, products, services, specifications or product descriptions at any time, without notice. Skyworks makes no commitment to update the materials or information and shall have no responsibility whatsoever for conflicts, incompatibilities, or other difficulties arising from any future changes.

No license, whether express, implied, by estoppel or otherwise, is granted to any intellectual property rights by this document. Skyworks assumes no liability for any materials, products or information provided hereunder, including the sale, distribution, reproduction or use of Skyworks products, information or materials, except as may be provided in Skyworks’ Terms and Conditions of Sale.

THE INFORMATION IN THIS DOCUMENT AND THE MATERIALS AND PRODUCTS DESCRIBED THEREIN ARE PROVIDED “AS IS” WITHOUT WARRANTY OF ANY KIND, WHETHER EXPRESS, IMPLIED, STATUTORY, OR OTHERWISE, INCLUDING FITNESS FOR A PARTICULAR PURPOSE OR USE, MERCHANTABILITY, PERFORMANCE, QUALITY OR NON-INFRINGEMENT OF ANY INTELLECTUAL PROPERTY RIGHT; ALL SUCH WARRANTIES ARE HEREBY EXPRESSLY DISCLAIMED. SKYWORKS DOES NOT WARRANT THE ACCURACY OR COMPLETENESS OF THE INFORMATION, TEXT, GRAPHICS OR OTHER ITEMS CONTAINED WITHIN THESE MATERIALS. SKYWORKS SHALL NOT BE LIABLE FOR ANY DAMAGES, INCLUDING BUT NOT LIMITED TO ANY SPECIAL, INDIRECT, INCIDENTAL, STATUTORY, OR CONSEQUENTIAL DAMAGES, INCLUDING WITHOUT LIMITATION, LOST REVENUES OR LOST PROFITS THAT MAY RESULT FROM THE USE OF THE MATERIALS OR INFORMATION, WHETHER OR NOT THE RECIPIENT OF MATERIALS HAS BEEN ADVISED OF THE POSSIBILITY OF SUCH DAMAGE.

Skyworks products are not designed, intended, authorized, or warranted for use or inclusion in life support or life endangering applications, devices, or systems where failure or inaccuracy might cause death or personal injury. Skyworks customers agree not to use or sell the Skyworks products for such applications, and further agree to, without limitation, fully defend, indemnify, and hold harmless Skyworks and its agents from and against any and all actions, suits, proceedings, costs, expenses, damages, and liabilities including attorneys' fees arising out of or in connection with such improper use or sale.

Skyworks assumes no liability for applications assistance, customer product design, or damage to any equipment resulting from the use of Skyworks products outside of Skyworks’ published specifications or parameters. Customers are solely responsible for their products and applications using the Skyworks products.

“Skyworks” and the Skyworks Starburst logo are registered trademarks of Skyworks Solutions, Inc., in the United States and other countries. Third-party brands and names are for identification purposes only and are the property of their respective owners. Additional information, including relevant terms and conditions, posted at www.skyworksinc.com, are incorporated by reference.