DATA SHEET

SKY66404-11: 2.4 GHz Front-End Module for Bluetooth®/Zigbee®/Thread Applications

Applications

- In-home appliances
- Smart thermostats
- Internet of Things (IoT) devices
- Smart lighting
- Sensors
- Range extender
- Wireless audio

Features

- Integrated power amplifier (PA) with up to +17 dBm output power
- Integrated low-noise amplifier (LNA), with 2.5 dB noise figure typical, and bypass path
- Integrated antenna diversity switching for all modes
- Single-ended transmit (TX)/receive (RX) interface
- Fast switch on/off time: < 800 ns
- Supply range: 1.7 V to 3.6 V
- Sleep mode current: < 1 µA typical
- No external bias resistor required
- Small 3.5 mm x 3.0 mm x 0.8 mm, 22-pin multichip module (MCM) package
- MSL3, 260 °C per JEDEC J-STD-020
- For RoHS and other product compliance information, see the Skyworks Certificate of Conformance.

Description

The SKY66404-11 is a high-performance, fully integrated RF front-end module (FEM) designed for Bluetooth® (including low energy), Zigbee®, and Thread applications.

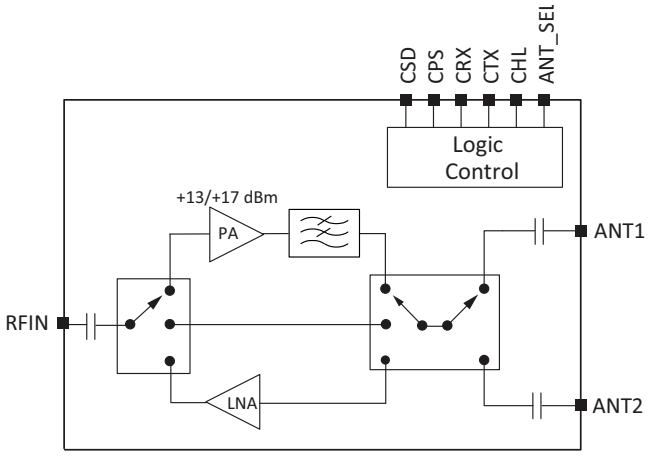

Figure 1. Functional Block Diagram

The SKY66404-11 is designed for ease of use and maximum flexibility. The device provides integrated interstage matching and harmonic filter, and digital controls compatible with 1.6 V to 3.6 V CMOS levels.

The RF blocks operate over a wide supply voltage range from 1.7 V to 3.6 V. This allows the SKY66404-11 to be used in battery-powered applications over a wide spectrum of the battery discharge curve.

A functional block diagram is shown in Figure 1. The pinout is shown in Figure 2, and signal descriptions are provided in Table 1.

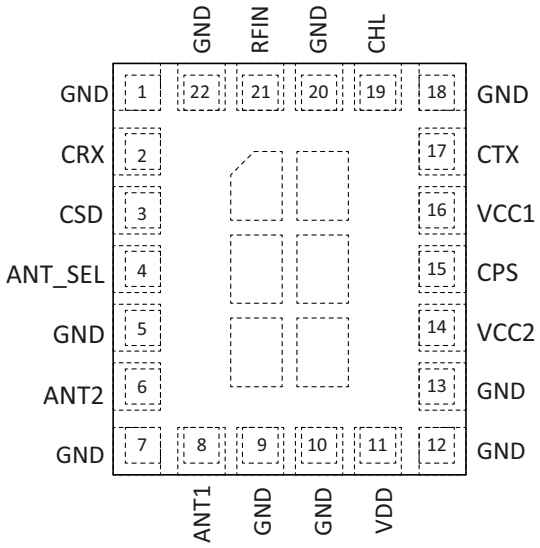

Figure 2. Pinout (Top View)

Table 1. Pin Descriptions

Pin	Name	Description	Pin	Name	Description
1	GND	Ground	12	GND	Ground
2	CRX	Connect to GPIO signal for mode control (see Table 6).	13	GND	Ground
3	CSD	Connect to GPIO signal for mode control (see Table 6).	14	VCC2	PA output stage supply
4	ANT_SEL	Connect to GPIO signal to control antenna switch (see Table 7).	15	CPS	Connect to GPIO signal for mode control (see Table 6).
5	GND	Ground	16	VCC1	PA bias and LNA supply
6	ANT2	Connect to 50 Ω antenna	17	CTX	Connect to GPIO signal for mode control (see Table 6).
7	GND	Ground	18	GND	Ground
8	ANT1	Connect to 50 Ω antenna	19	CHL	Connect to GPIO signal for mode control (see Table 6).
9	GND	Ground	20	GND	Ground
10	GND	Ground	21	RFIN	RF input power (transmit/receive port)
11	VDD	Digital logic and RF switch supply	22	GND	Ground

Electrical Specifications

Table 2. Absolute Maximum Ratings[1]

Parameter	Symbol	Min	Max	Units
Supply voltage	VCC1	–0.3	+3.6	V
	VCC2	–0.3	+3.6	
	VDD	–0.3	+3.6	
Control pin voltages	VCTL	–0.3	+3.6	V
Transmit input power at RFIN port	PIN_TX		+8	dBm
Receive input power at ANT1 and ANT2ports[2]	PIN_RX		+15	dBm
Bypass input power at ANT1 and ANT2 ports[2]	PIN_BYP		+20	dBm
Voltage standing wave ratio	VSWR		10:1	
Operating temperature	TA	–40	+105	°C
Storage temperature	TSTG	–40	+125	°C
Electrostatic discharge: Human Body Model (HBM)	ESD		3000	V

1. Exposure to maximum rating conditions for extended periods may reduce device reliability. There is no damage to device with only one parameter set at the limit and all other parameters set at or below their nominal value. Exceeding any of the limits listed here may result in permanent damage to the device.
2. CW test signal.

ESD Handling: *Industry-standard ESD handling precautions must be adhered to at all times to avoid damage to this device.*

Table 3. Recommended Operating Conditions[1]

Parameter	Symbol	Min	Typ	Max	Units
Supply voltage on VCC1 pin	VCC1	1.7	3.0	3.6	V
Supply voltage on VCC2 pin	VCC2	0.6	3.0	3.6	V
Supply voltage on VDD pin	VDD	1.7	3.0	3.6	V
Operating temperature	TA	–40	+25	+105	°C

1. Performance is assured only under the conditions listed in this table and is not invariant over the full operating or storage temperature ranges. Operation at elevated temperatures may reduce reliability of the device.

Table 4. DC Electrical Specifications[1]

(VCC1 = VCC2 = VDD = 3.0 V, TA = +25 °C, Unless Otherwise Noted)

Parameter	Symbol	Test Condition	Min	Typ	Max	Units
DC Characteristics						
Transmit operating current	ICC_TX	P_{OUT} = +13 dBm, linear (1.8 V)		28		mA
		P_{OUT} = +17 dBm, linear		42		mA
Transmit quiescent current	ICCQ_TX	Linear mode (CHL high)		7		mA
		High-efficiency mode (CHL low)		4		mA
Receive mode current	ICC_RX			3.5	6	mA
Bypass mode current	ICC_BYP			5		µA
Sleep mode current	ICC_OFF	No RF			1	µA
Logic Characteristics						
Control voltage						
High	VIH		1.6		VDD	V
Low	VIL		0		0.3	V
Control current						
High	IIH				1.0	µA
Low	IIL				1.0	µA

1. Performance is assured only under the conditions listed in this table and is not invariant over the full operating or storage temperature ranges. Operation at elevated temperatures may reduce reliability of the device.

Table 5. AC Electrical Specifications[1]

(VCC1 = VCC2 = VDD = 3.0 V, TA = +25 °C, All Unused Ports Terminated with 50 Ω, Unless Otherwise Noted)

Parameter	Symbol	Test Condition	Min	Typ	Max	Units
Transmit Characteristics						
Frequency range	f		2400		2483.5	MHz
Output power at ANT1 or ANT2 port	POUT	VCC1 = VCC2 = VDD = 1.8 V, PIN =		13		dBm
		VCC1 = VCC2 = VDD = 3.0 V, PIN =		17		
Saturated gain	GSAT	PIN = +6 dBm		11		dB
Small signal gain	S21_TX	Linear mode		11.5		dB
Saturated output power variation	GSLOPE				1	dBp-p
Input return loss	S11_TX			–10		dB
Second to tenth harmonics[2]	2fo to 10fo	POUT = +17 dBm, Zigbee			–42	dBm/MHz
Turn-on time[2]	tON_TX	From 50% of CTX edge to 90% of		800		ns
Turn-off time[2]	tOFF_TX	From 50% of CTX edge to 10% of		800		ns
Stability[2]	STAB	CW, PIN = +6 dBm, 0.1 GHz to 20 GHz, load VSWR = 6:1	All non-harmonically related outputs. < –42 dBm/MHz			
Ruggedness[2]	RUG	CW, PIN = +6 dBm, load VSWR =	No permanent damage			
Receive characteristics						
Frequency range	f		2400		2483.5	MHz

Table 5. AC Electrical Specifications[1] (Continued)

(VCC1 = VCC2 = VDD = 3.0 V, TA = +25 °C, All Unused Ports Terminated with 50 Ω, Unless Otherwise Noted)

Parameter	Symbol	Test Condition	Min	Typ	Max	Units
Receive gain	S21_RX			13		dB
Receive noise figure	NF			2.5		dB
Third order input intercept point	IIP3			2		dBm
1 dB input compression point	IP1dB		–14	–8		dBm
Input return loss	S11_RX	ANT1 or ANT2 port		–10		dB
Output return loss	S22_RX	RFIN port		–10		dB
Turn-on time[2]	tON_RX	From 50% of CRX edge to 90% of		800		ns
Turn-off time[2]	tOFF_RX	From 50% of CRX edge to 10% of		800		ns
Bypass Characteristics						
Frequency range	f		2400		2483.5	MHz
Bypass gain	S21_BYP			–2.5		dB
Input return loss	S11_BYP	ANT1 or ANT2 ports		–15		dB
Output return loss	S22_BYP	RFIN port		–15		dB
Dual antenna switch characteristics						
Isolation between ANT1 and ANT2 ports	ISOANTSW			–20		dB
ANT1 to ANT2 switching time	tANT1_ANT2			400		ns

1. Performance is assured only under the conditions listed in this table and is not invariant over the full operating or storage temperature ranges. Operation at elevated temperatures may reduce reliability of the device.
2. Not tested in production. Fully characterized and assured by design.

Table 6. Mode Control Logic[1]

(VCC1 = VCC2 = VDD = 3.0 V, TA = +25 °C)

Mode	Description	CSD (Pin 3)	CPS (Pin 15)	CRX (Pin 2)	CTX (Pin 17)	CHL (Pin 19)
0	All off (sleep mode)[1]	0	X	X	X	X
1	Receive LNA mode	1	0	1	0	X
2	Transmit linear mode	1	0	X	1	1
3	Transmit high-efficiency mode	1	0	X	1	0
4	Receive bypass mode	1	1	1	0	X
5	Transmit bypass mode	1	1	X	1	X
6	All off (sleep mode)	1	X	0	0	X

1. All controls must be at VDD or 0 V to achieve the specified sleep current.

Table 7. Antenna Select Logic

(VCC1 = VCC2 = VDD = 3.0 V, TA = +25 °C)

Description	ANT_SEL (Pin 4)
ANT1 port enabled	0
ANT2 port enabled	1

CHL Control Pin

The CHL pin controls the bias of the PA. Use CHL high for high-linearity (HL) mode, which features higher gain and flat gain vs. PIN. Use CHL low for high-efficiency (HE) mode, which features slightly lower ICC for a given POUT.

Due to ACP requirements, it is necessary to use HL mode for Bluetooth EDR applications.

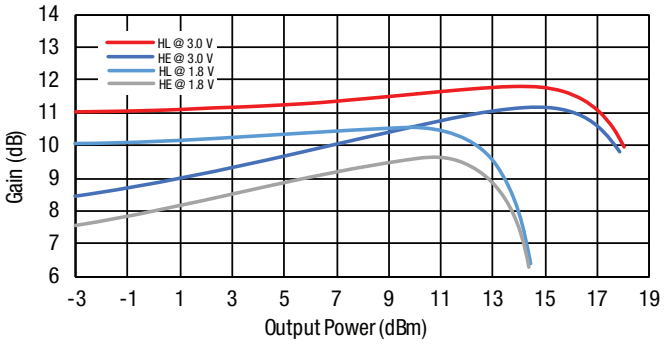

Figure 3. Effect of CHL on Gain

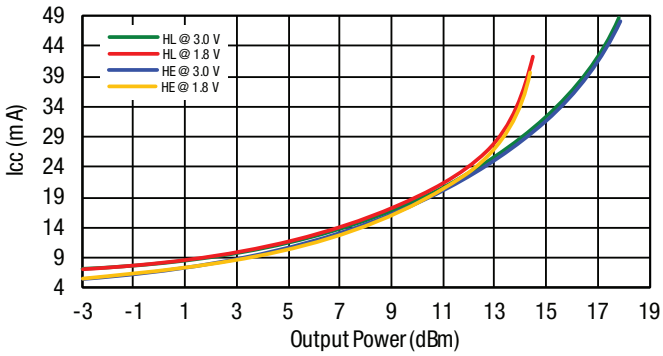

Figure 4. Effect of CHL on Supply Current

Effect of VCC2

VCC2 supplies the output stage of the PA. The level of VCC2 directly controls the saturated TX output power and this supply draws the majority of the current in TX mode.

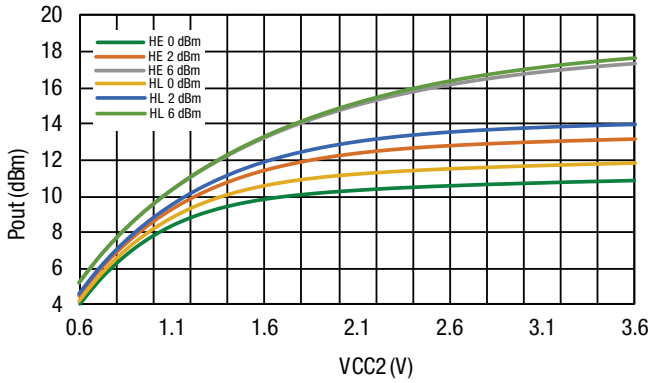

Figure 5. POUT versus VCC2 and PIN

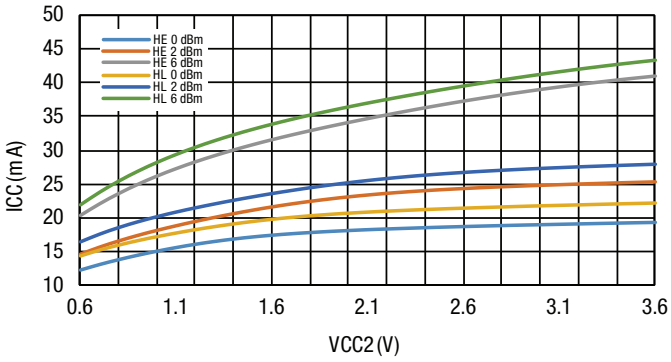

Figure 6. ICC versus VCC2 and PIN

Reference Design Schematic

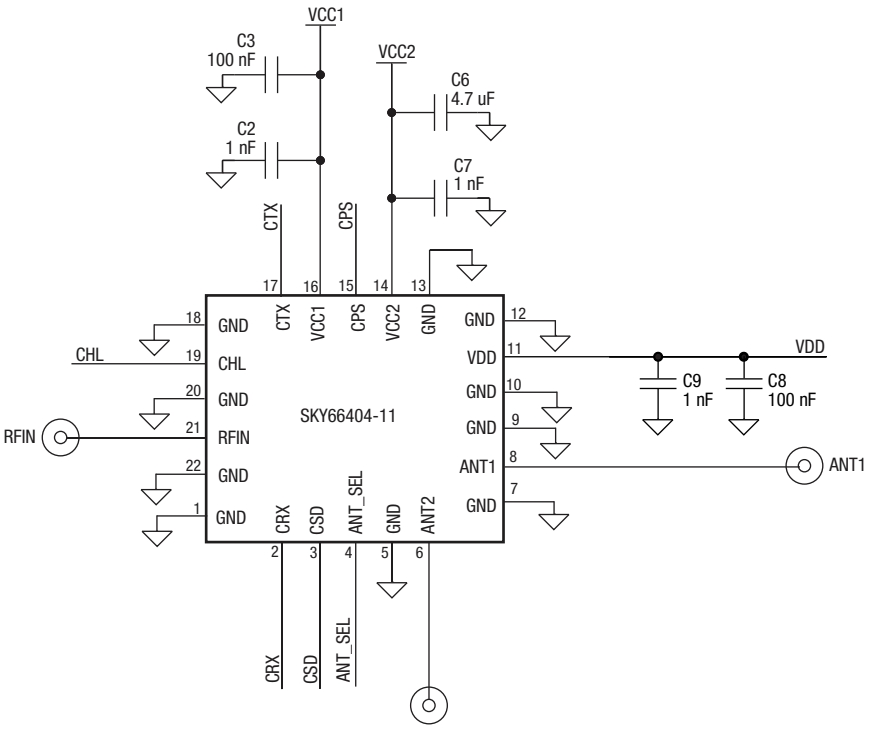

Note: The paddle should be connected to ground.

Figure 7. Reference Design Schematic

Evaluation Board Description

Figure 8 shows a photo of the evaluation board.

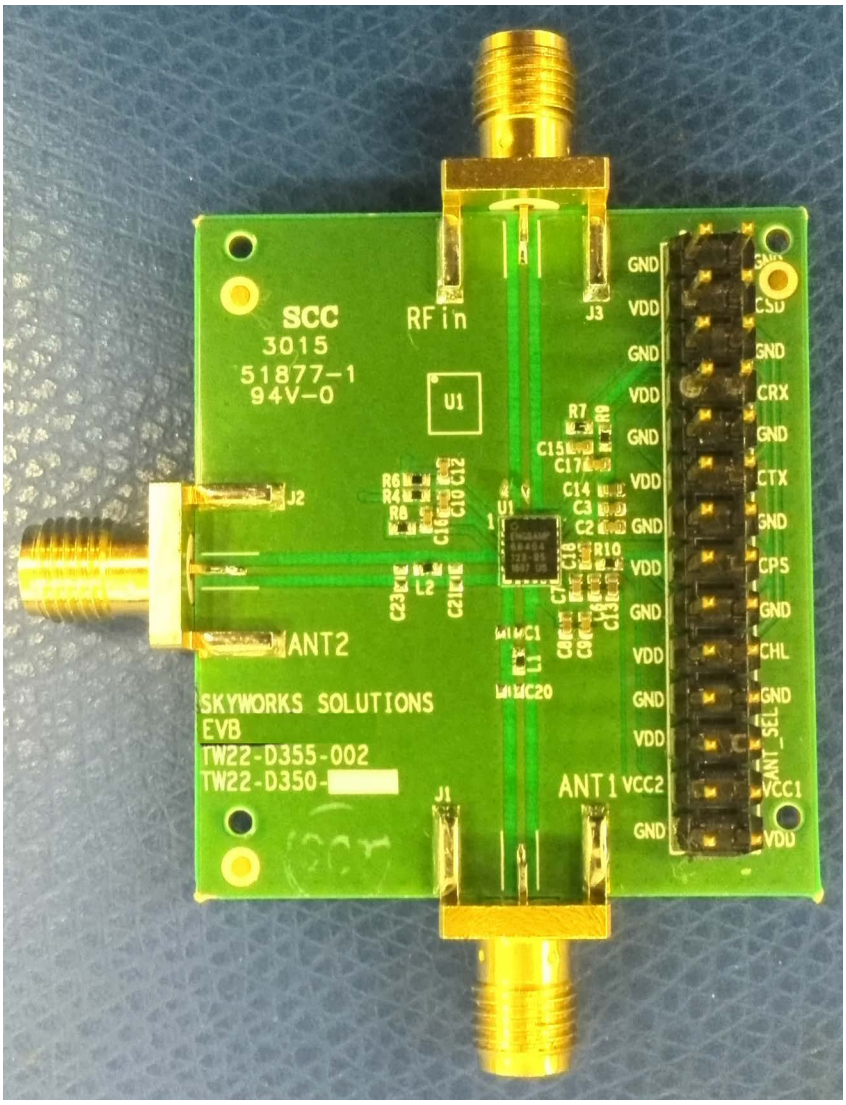

Figure 8. Evaluation Board

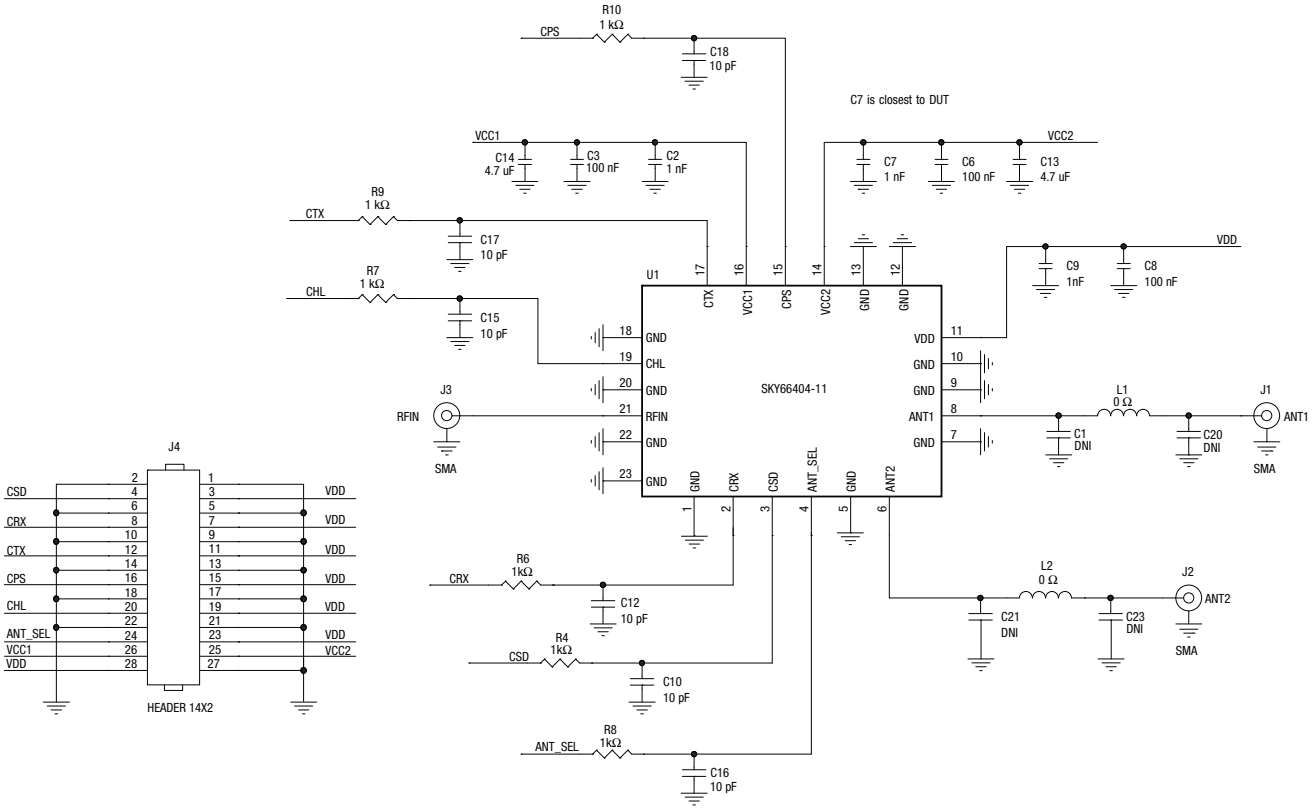

Figure 9. Evaluation Board Schematic

Table 8. Bill of Material (BOM)

Quantity	Reference Designators	Size	Part Description
4	C1, C20, C21, C23		DNI
2	C13, C14	0402	Ceramic capacitor, 4.7 µF, 20%, X5R, 4 V
9	C2, C7, C9, C10, C12, C15, C16, C17, C18	0402	Ceramic capacitor, 1000 pF, 10%, X7R 50 V
3	C3, C6, C8	0402	Ceramic capacitor, 0.1 µF, 10%, X7R, 16 V
3	J1, J2, J3		Connector, SMA
1	J4		Header, 14 x 2 pin
2	L1, L2	0402	Resistor, 0 Ω, jumper, 0.063 W
6	R4, R6, R7, R8, R9, R10	0402	Resistor, 1000 Ω, 5%, 0.063 W

Package and Handling Information

Since the device is sensitive to moisture absorption, it is baked and vacuum packed before shipping. Instructions on the shipping container label regarding exposure to moisture after the container seal is broken must be followed. Otherwise, problems related to moisture absorption may occur when the part is subjected to high temperature during solder assembly. The SKY66404-11 is rated to Moisture Sensitivity Level 3 (MSL3) at 260 °C. It can be used for lead- or lead-free soldering. For additional information, refer to the Skyworks Application Note, Solder Reflow Information, document number 200164.

Care must be taken when attaching this product, whether it is done manually or in a production solder reflow environment. Production quantities of this product are shipped in a standard tape and reel format.

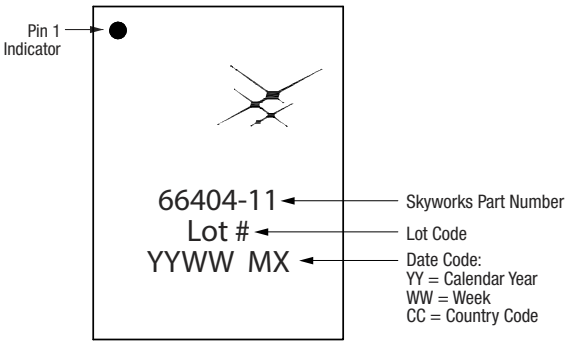

Figure 10. Typical Part Marking

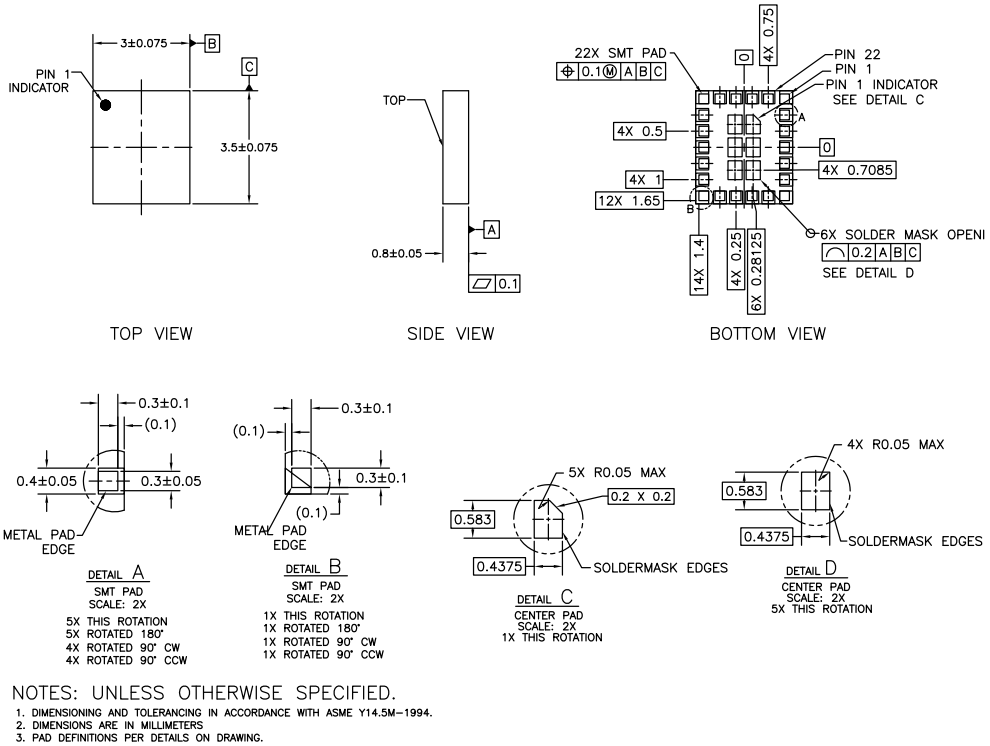

Figure 11. Package Dimensions

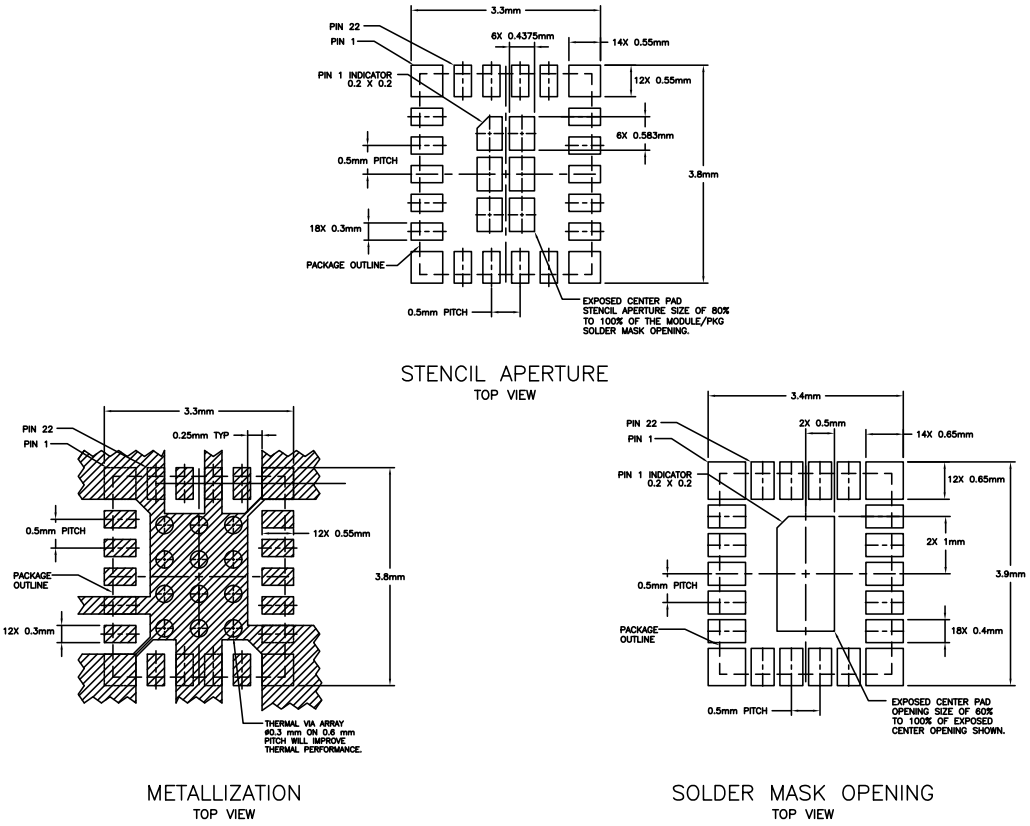

Figure 12. PCB Layout Footprint

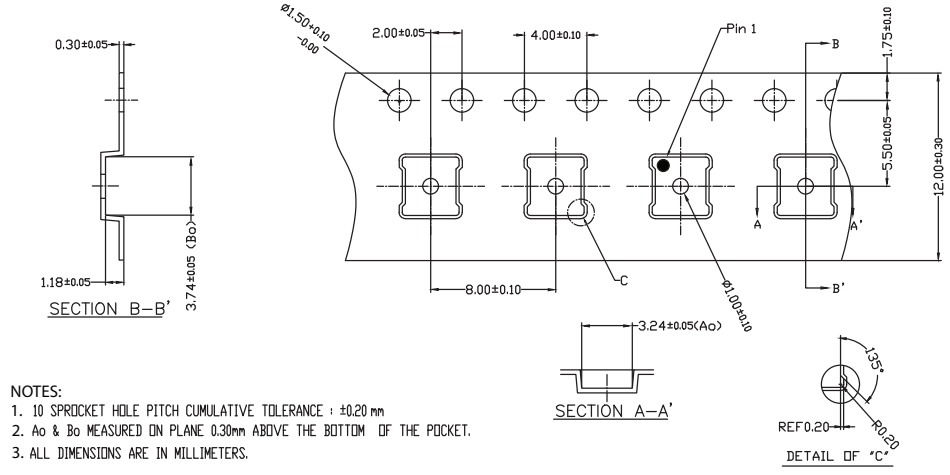

Figure 13. Tape and Reel Information

Ordering Information

Part Number	Description	Evaluation Board Part Number
SKY66404-11	2.4 GHz Front-End Module for Bluetooth®/Zigbee®/Thread Applications	SKY66404-11EK3

Copyright © 2017, 2018, 2019, 2026, Skyworks Solutions, Inc. All Rights Reserved.

Information in this document is provided in connection with Skyworks Solutions, Inc., and its subsidiaries (“Skyworks”) products or services. These materials, including the information contained herein, are provided by Skyworks as a service to its customers and may be used for informational purposes only by the customer. Skyworks assumes no responsibility for errors or omissions in these materials or the information contained herein. Skyworks may change its documentation, products, services, specifications or product descriptions at any time, without notice. Skyworks makes no commitment to update the materials or information and shall have no responsibility whatsoever for conflicts, incompatibilities, or other difficulties arising from any future changes.

No license, whether express, implied, by estoppel or otherwise, is granted to any intellectual property rights by this document. Skyworks assumes no liability for any materials, products or information provided hereunder, including the sale, distribution, reproduction or use of Skyworks products, information or materials, except as may be provided in Skyworks’ Terms and Conditions of Sale.

THE INFORMATION IN THIS DOCUMENT AND THE MATERIALS AND PRODUCTS DESCRIBED THEREIN ARE PROVIDED “AS IS” WITHOUT WARRANTY OF ANY KIND, WHETHER EXPRESS, IMPLIED, STATUTORY, OR OTHERWISE, INCLUDING FITNESS FOR A PARTICULAR PURPOSE OR USE, MERCHANTABILITY, PERFORMANCE, QUALITY OR NON-INFRINGEMENT OF ANY INTELLECTUAL PROPERTY RIGHT; ALL SUCH WARRANTIES ARE HEREBY EXPRESSLY DISCLAIMED. SKYWORKS DOES NOT WARRANT THE ACCURACY OR COMPLETENESS OF THE INFORMATION, TEXT, GRAPHICS OR OTHER ITEMS CONTAINED WITHIN THESE MATERIALS. SKYWORKS SHALL NOT BE LIABLE FOR ANY DAMAGES, INCLUDING BUT NOT LIMITED TO ANY SPECIAL, INDIRECT, INCIDENTAL, STATUTORY, OR CONSEQUENTIAL DAMAGES, INCLUDING WITHOUT LIMITATION, LOST REVENUES OR LOST PROFITS THAT MAY RESULT FROM THE USE OF THE MATERIALS OR INFORMATION, WHETHER OR NOT THE RECIPIENT OF MATERIALS HAS BEEN ADVISED OF THE POSSIBILITY OF SUCH DAMAGE.

Skyworks products are not designed, intended, authorized, or warranted for use or inclusion in life support or life endangering applications, devices, or systems where failure or inaccuracy might cause death or personal injury. Skyworks customers agree not to use or sell the Skyworks products for such applications, and further agree to, without limitation, fully defend, indemnify, and hold harmless Skyworks and its agents from and against any and all actions, suits, proceedings, costs, expenses, damages, and liabilities including attorneys' fees arising out of or in connection with such improper use or sale.

Skyworks assumes no liability for applications assistance, customer product design, or damage to any equipment resulting from the use of Skyworks products outside of Skyworks’ published specifications or parameters. Customers are solely responsible for their products and applications using the Skyworks products.

“Skyworks” and the Skyworks Starburst logo are registered trademarks of Skyworks Solutions, Inc., in the United States and other countries. Third-party brands and names are for identification purposes only and are the property of their respective owners. Additional information, including relevant terms and conditions, posted at www.skyworksinc.com, are incorporated by reference.