DATA SHEET

SKY13575-639LF: Dual-Band Matched SP4T Switch for Wi-Fi® Applications

Applications

- Dual-band WLAN
- 3G/4G LTE systems
- WLAN 802.11a/b/g/n/ac

Features

- Off-ports matched to 50 Ω
- Low insertion loss: 0.6 dB at 2.5 GHz, 1.1 dB at 6 GHz (typical)
- High isolation: 40 dB at 2.5 GHz, 30 dB at 6 GHz (typical)
- Integrated GPIO interface
- Small 14-pin, 1.6 x 1.6 x 0.45 mm QFN package, MSL1, 260 °C per JEDEC J-STD-020
- For RoHS and other product compliance information, see the Skyworks Certificate of Conformance.

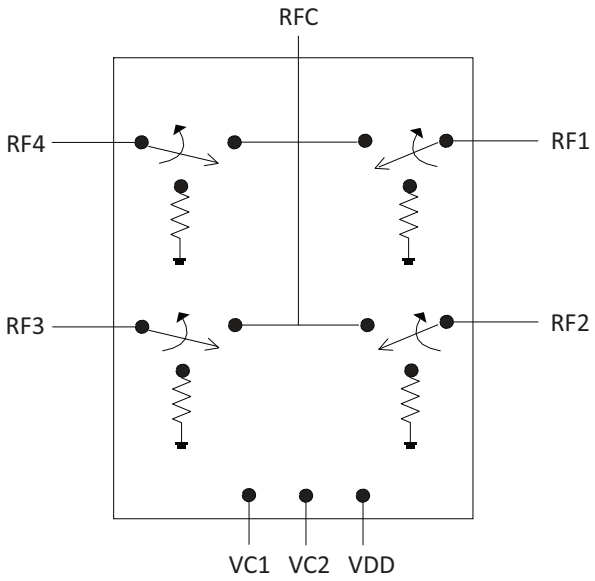

Figure 1. Functional Block Diagram

Description

The SKY13575-639LF is a dual-band, single-pole, four-throw switch with an integrated 50 Ω match on all RF output ports.

External dc blocking capacitors are required on the RF paths. The switch can operate over a temperature range of –40 C to 90 °C.

Switching is controlled by two CMOS/TTL-compatible control voltage inputs: VC1 and VC2. Depending on the logic voltage applied to the control pins, the common pin is connected to one of four switched outputs (RF1 to RF4) by a low insertion loss path. The path between the common pin and the other RF pins is in isolation. The isolated ports are terminated to a 50 Ω load.

A functional block diagram is shown in Figure 1. The pin configuration and package are shown in Figure 2. Signal pin assignments and functional descriptions are provided in Table 1.

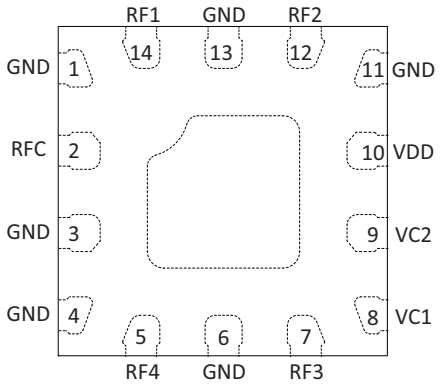

Figure 2. Pinout (Top View)

Table 1. Pin Descriptions[1]

Pin	Name	Description	Pin	Name	Description
1	GND	Ground	8	VC1	Control voltage 1
2	RFC	RF common port	9	VC2	Control voltage 2
3	GND	Ground	10	VDD	Battery voltage
4	GND	Ground	11	GND	Ground
5	RF4	RF output port 4	12	RF2	RF output port 2
6	GND	Ground	13	GND	Ground
7	RF3	RF output port 3	14	RF1	RF output port 1

1. Exposed pads must be grounded.

Electrical Specifications

Table 2. Absolute Maximum Ratings[1]

Parameter	Symbol	Condition	Min	Max	Units
Supply voltage	V_{DD}	T = 25 °C		3.7	V
Control voltage	V_{C1}, V_{C2}	T = 25 °C	–0.5	3.3	V
RF input power	RF_{IN}	Peak power at RFC port, T = 25 °C; 50 Ω		+32	dBm
Output port 50 Ω power handling	50 Ω P_{MAX}	Maximum power applied to the output port in isolation mode		+15	dBm
Operating case temperature	$T_{CASEMAX}$		–40	+90	°C
Storage temperature	T_{STORE}		–55	+150	°C
Electrostatic discharge: Human Body Model (HBM), Class 1C	ESD			1000	V

1. Exposure to maximum rating conditions for extended periods may reduce device reliability. There is no damage to device with only one parameter set at the limit and all other parameters set at or below their nominal value. Exceeding any of the limits listed here may result in permanent damage to the device.

ESD HANDLING: *Industry-standard ESD handling precautions must be adhered to at all times to avoid damage to this device.*

Table 3. Small Signal[1]

(V_{DD} = 3.3 V, V_{C1} = V_{C2} = High = 3.0 V, P_{IN} = 0 dBm, T_{OP} = +25 °C, Characteristic Impedance [ZO] = 50 Ω, Unless Otherwise Noted)

Parameter	Symbol	Test Condition	Min	Typ	Max	Units
Insertion loss RFC to RF1, RF2, RF3, RF4	IL	0.1 to 2.4 GHz		0.6	0.8	dB
		2.4 to 2.5 GHz		0.6	0.9	
		4.8 to 6.0 GHz		1.1	1.4	
Isolation RFC to RF1, RF2, RF3, RF4	Iso	0.1 to 2.4 GHz	35	40		dB
		2.4 to 2.5 GHz	35	40		
		4.8 to 6.0 GHz	26	30		
Output return loss in isolation state RF1, RF2, RF3, RF4	RL_Off port	2.4 to 2.5 GHz	14	17		
		4.8 to 6.0 GHz		10.5		dB

1. Performance is assured only under the conditions listed in this table.

Table 4. Large Signal[1]

(V_{DD} = 3.3 V, V_{C1} = V_{C2} = High = 3.0 V, P_{IN} = 0 dBm, T_{OP} = +25 °C, Characteristic Impedance [ZO] = 50 Ω, Unless Otherwise Noted)

Parameter	Symbol	Test Condition	Min	Typ	Max	Units
LB second harmonics RFC to RF1, RF2, RF3, RF4	2fo	fo = 2.4 to 2.5 GHz, P_{IN} = + 20 dBm	65	80		dBc
LB third harmonics RFC to RF1, RF2, RF3, RF4	3fo	fo = 2.4 to 2.5 GHz, P_{IN} = + 20 dBm	70	80		dBc
HB second harmonics RFC to RF1, RF2, RF3, RF4	2fo	fo = 4.8 to 6.0 GHz, P_{IN} = + 20 dBm	52	70		dBc
HB third harmonics RFC to RF1, RF2, RF3, RF4	3fo	fo = 4.8 to 6.0 GHz, P_{IN} = + 20 dBm	60	70		dBc
LB EVM power RFC to RF1, RF2, RF3, RF4	P_EVM_LB	fo = 2.45 GHz, input power for 2.5% error, 802.11g, 54 Mbps	25	27		dBm
HB EVM power RFC to RF1, RF2, RF3, RF4	P_EVM_HB	fo = 5.8 GHz, input power for 2.5% error, 802.11g, 54 Mbps	25	27		dBm
LB input IP3 RFC to RF1, RF2, RF3, RF4 +20 dBm input power	LB_IIP3	Two tones, 1 MHz spacing, fo = 2.4 to 2.5 GHz	+52	+55		dBm
HB Input IP3 RFC to RF1, RF2, RF3, RF4 +20 dBm input power	HB_IIP3	Two tones, 1 MHz spacing fo = 4.8 to 6.0 GHz	+52	+55		dBm

1. Performance is assured only under the conditions listed in this table.

Table 5. DC Operating[1]

(V_{DD} = 3.3 V, V_{C1} = V_{C2} = High = 3.0 V, P_{IN} = 0 dBm, T_{OP} = +25 °C, Characteristic Impedance [ZO] = 50 Ω, Unless Otherwise Noted)

Parameter	Symbol	Test Condition	Min	Typ	Max	Units
Supply voltage	V_{DD}	T = 25 °C	2.5	3.3	3.5	V
Control voltage high	VC1_H, VC2_H	T = 25 °C	2.5	3.0	3.3	V
Control voltage low	VC1_L, VC2_L	T = 25 °C		0	0.45	V
Supply current	IDD	T = 25 °C		8	10	µA
Switching speed	SS	50% CTL to 90% RF 5 % CTL to 10% RF		400	500	ns
Rise/fall time	tON/tOFF	10% RF to 90% RF 90% RF to 10% RF			500	ns
Startup time	tSTART	From V_{DD} off to V_{DD} on		500	1000	ns

1. Performance is assured only under the conditions listed in this table.

Table 6. Logic Truth Table[1]

Low-Loss Path	VC1	VC2
RFC to RF1	L	L
RFC to RF2	L	H
RFC to RF3	H	L
RFC to RF4	H	H

1. H = 2.5 to 3.3 V
   L = 0 to 0.45 V

Evaluation Board Description

An evaluation board is used to test the performance of the SKY13575-639LF. A schematic diagram is provided in Figure 3. Figure 4 shows the evaluation board assembly diagram.

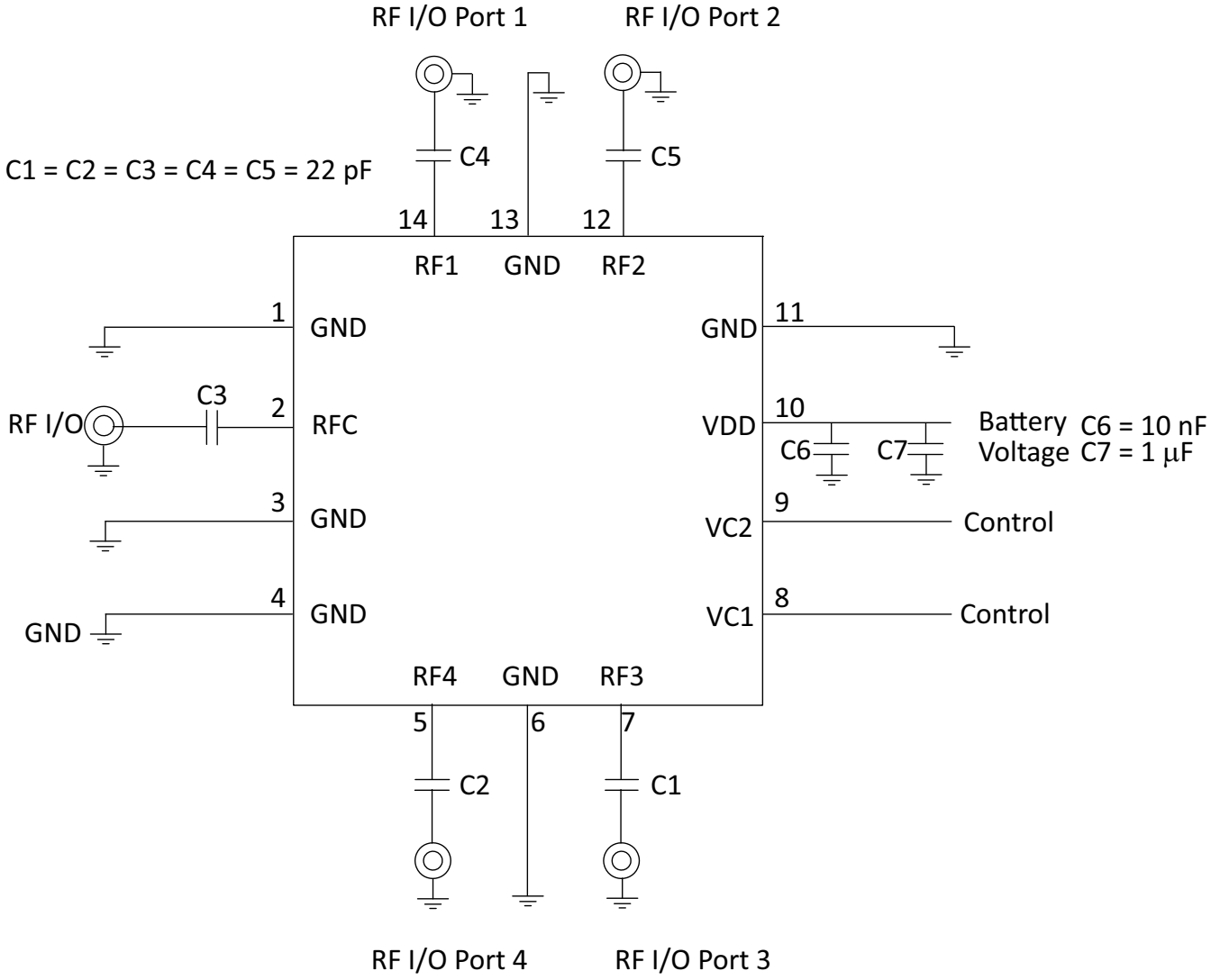

Figure 3. Evaluation Board Schematic

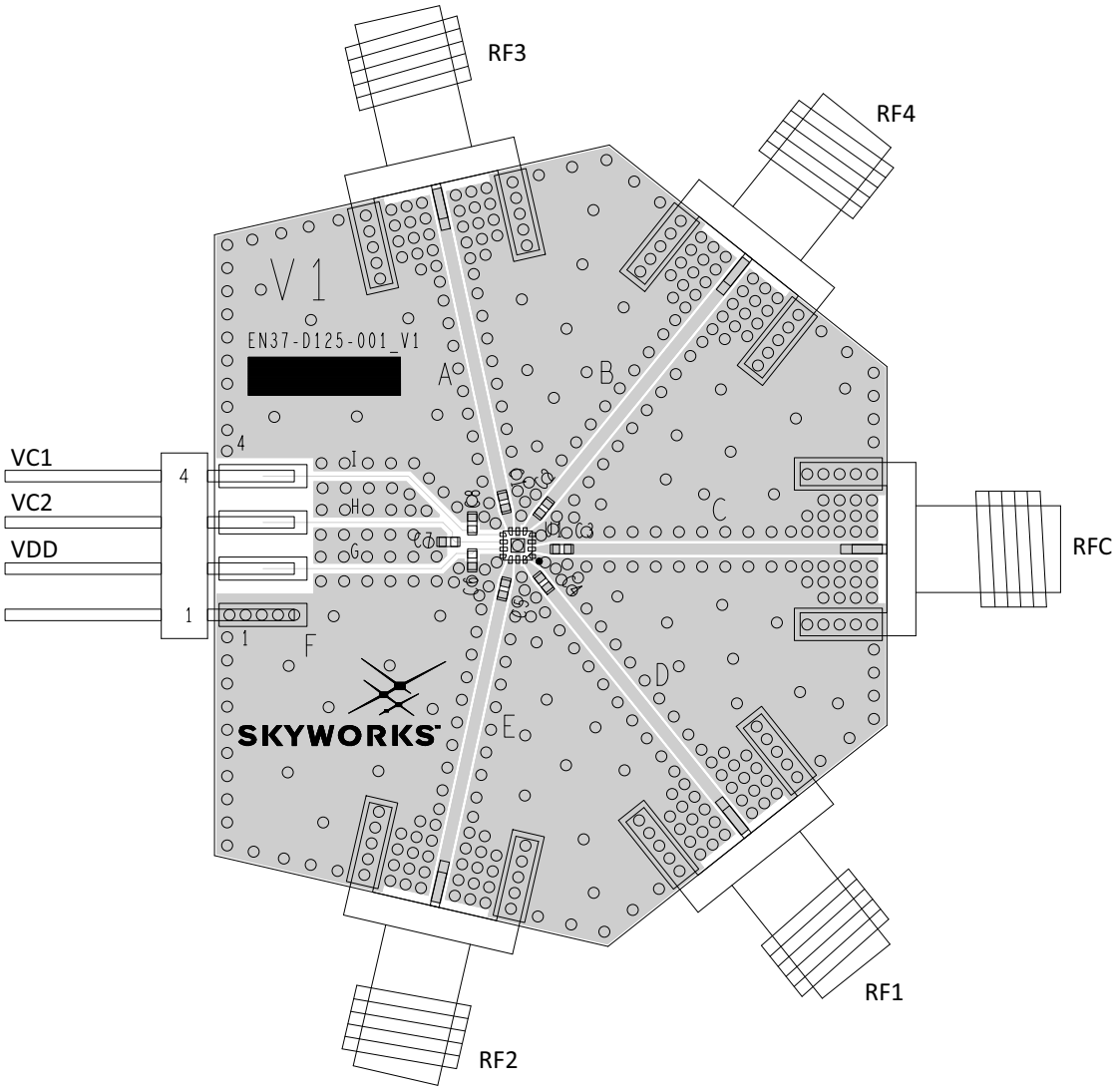

Figure 4. Evaluation Board Assembly Diagram

Package and Handling Information

Instructions on the shipping container label regarding exposure to moisture after the container seal is broken must be followed. Otherwise, problems related to moisture absorption may occur when the part is subjected to high temperature during solder assembly.

The SKY13575-639LF is rated to Moisture Sensitivity Level 1 (MSL 1) at 260 °C. It can be used for lead- or lead-free soldering. For additional information, refer to the Skyworks Application Note, “Solder Reflow Information,” document number 200164.

Care must be taken when attaching this product, whether it is done manually or in a production solder reflow environment. Product production quantities are shipped in a standard tape and reel format.

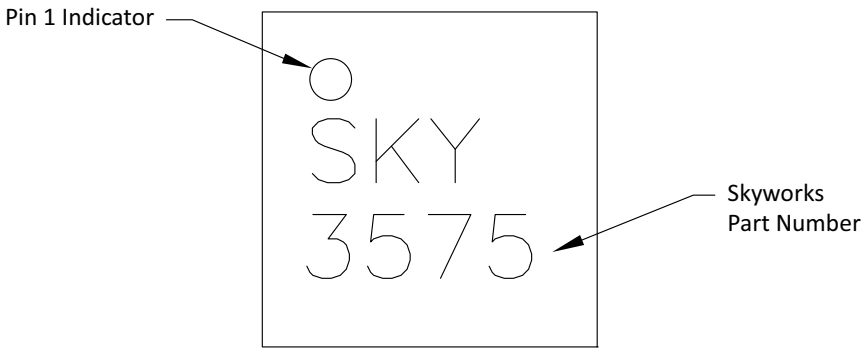

Figure 5. Typical Part Marking

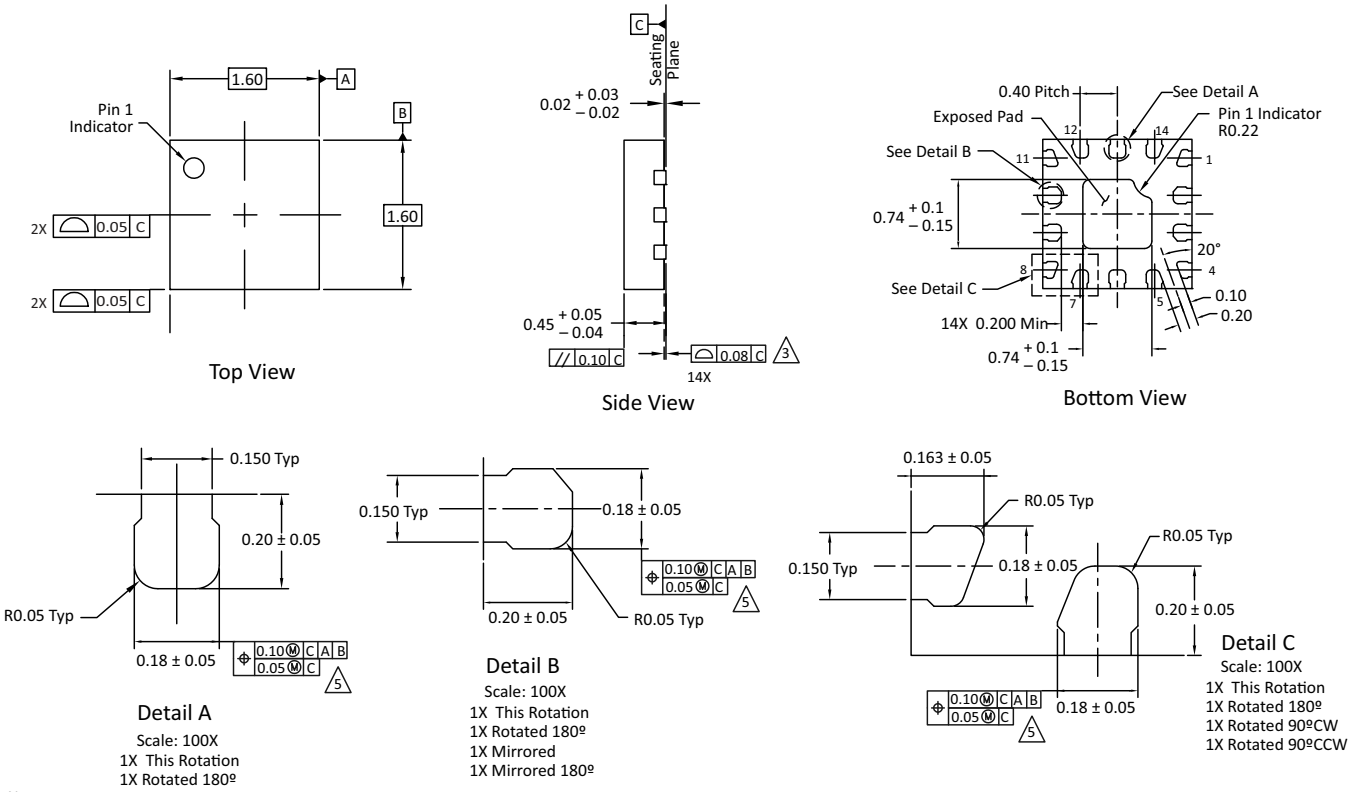

Notes:

1. All dimensions are in millimeters.
2. Dimensions and tolerances per ASME Y14.5M-1994.
3. Coplanarity applies to the terminal and all other bottom surface metallization.
4. Plating requirements per source control drawing (SCD) 2504.
5. Dimension applies to metallized terminal. If the terminal has a radius on its end, the width dimension should not be measured in the radius area.

Figure 6. Package Dimensions

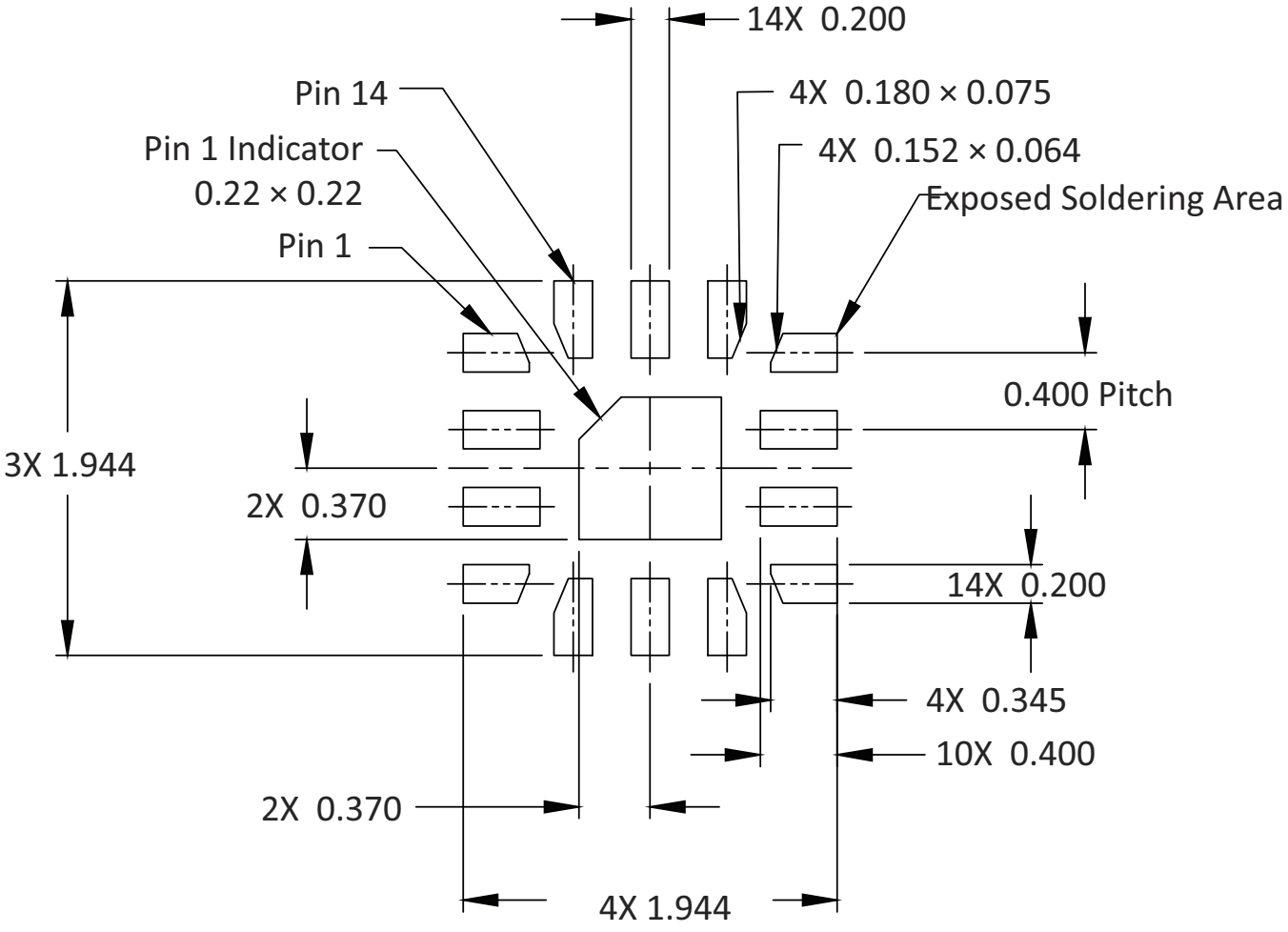

All dimensions are in millimeters.

Figure 7. PCB Layout Footprint

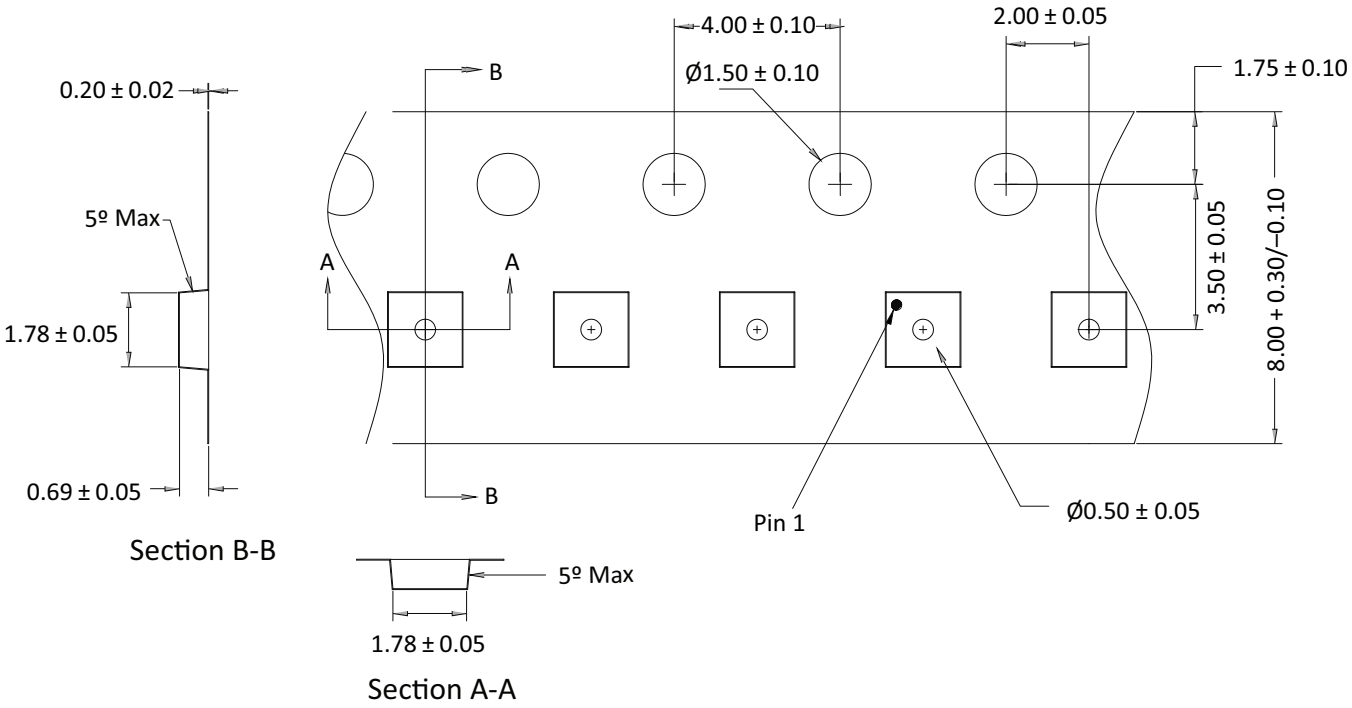

All measurements are in millimeters unless otherwise stated.

Figure 8. Tape and Reel Information

Ordering Information

Part Number	Description	Evaluation Board Part Number
SKY13575-639LF	Dual-Band Matched SP4T Switch for Wi-Fi® Applications	SKY13575-639-EVB

Copyright © 2015, 2016, 2018, 2026, Skyworks Solutions, Inc. All Rights Reserved.

Information in this document is provided in connection with Skyworks Solutions, Inc., and its subsidiaries (“Skyworks”) products or services. These materials, including the information contained herein, are provided by Skyworks as a service to its customers and may be used for informational purposes only by the customer. Skyworks assumes no responsibility for errors or omissions in these materials or the information contained herein. Skyworks may change its documentation, products, services, specifications or product descriptions at any time, without notice. Skyworks makes no commitment to update the materials or information and shall have no responsibility whatsoever for conflicts, incompatibilities, or other difficulties arising from any future changes.

No license, whether express, implied, by estoppel or otherwise, is granted to any intellectual property rights by this document. Skyworks assumes no liability for any materials, products or information provided hereunder, including the sale, distribution, reproduction or use of Skyworks products, information or materials, except as may be provided in Skyworks’ Terms and Conditions of Sale.

THE INFORMATION IN THIS DOCUMENT AND THE MATERIALS AND PRODUCTS DESCRIBED THEREIN ARE PROVIDED “AS IS” WITHOUT WARRANTY OF ANY KIND, WHETHER EXPRESS, IMPLIED, STATUTORY, OR OTHERWISE, INCLUDING FITNESS FOR A PARTICULAR PURPOSE OR USE, MERCHANTABILITY, PERFORMANCE, QUALITY OR NON-INFRINGEMENT OF ANY INTELLECTUAL PROPERTY RIGHT; ALL SUCH WARRANTIES ARE HEREBY EXPRESSLY DISCLAIMED. SKYWORKS DOES NOT WARRANT THE ACCURACY OR COMPLETENESS OF THE INFORMATION, TEXT, GRAPHICS OR OTHER ITEMS CONTAINED WITHIN THESE MATERIALS. SKYWORKS SHALL NOT BE LIABLE FOR ANY DAMAGES, INCLUDING BUT NOT LIMITED TO ANY SPECIAL, INDIRECT, INCIDENTAL, STATUTORY, OR CONSEQUENTIAL DAMAGES, INCLUDING WITHOUT LIMITATION, LOST REVENUES OR LOST PROFITS THAT MAY RESULT FROM THE USE OF THE MATERIALS OR INFORMATION, WHETHER OR NOT THE RECIPIENT OF MATERIALS HAS BEEN ADVISED OF THE POSSIBILITY OF SUCH DAMAGE.

Skyworks products are not designed, intended, authorized, or warranted for use or inclusion in life support or life endangering applications, devices, or systems where failure or inaccuracy might cause death or personal injury. Skyworks customers agree not to use or sell the Skyworks products for such applications, and further agree to, without limitation, fully defend, indemnify, and hold harmless Skyworks and its agents from and against any and all actions, suits, proceedings, costs, expenses, damages, and liabilities including attorneys' fees arising out of or in connection with such improper use or sale.

Skyworks assumes no liability for applications assistance, customer product design, or damage to any equipment resulting from the use of Skyworks products outside of Skyworks’ published specifications or parameters. Customers are solely responsible for their products and applications using the Skyworks products.

“Skyworks” and the Skyworks Starburst logo are registered trademarks of Skyworks Solutions, Inc., in the United States and other countries. Third-party brands and names are for identification purposes only and are the property of their respective owners. Additional information, including relevant terms and conditions, posted at www.skyworksinc.com, are incorporated by reference.